

LIQUEUR

COLLECTION

The LIQUEUR table collection is all about a lack of formal definition. There are no hard edges here - only soft transitions, gentle swells, and silhouettes that shift subtly from every angle, bending like the slow arc of a pour.

Designed to be highly customisable, from the most humble of side tables, to the grandest of dining or boardroom tables and to the longest of communal bar counters.

LIQUEUR Tables can be elegantly stretched in all directions - establishing their rightful place as our most flexible table collection.

LIQUEUR is made to order in range of different heights as tables, coffee, counter and high bar tables, offered in a wide range of sizes, optional pedestal supports, varying tabletop shapes and optional finishes. Custom extended sizes can be made to any length, and power/data can be integrated into tabletops including inside pedestals.

MATERIALS

American Oak pedestal fabrication.
American Oak tops.
Laminate tops by project request.

FINISHES

Natural Oak stain.
White or black laminate.
Other colours by project request.

FEATURES

Unlimited extended lengths available by request.
Multiple pedestal options to suit purpose.
Power & wiring can be installed inside pedestals.
Onsite assembly with ease.

WARRANTY

Five year manufacturing warranty covering defective craftsmanship that is subject to normal use. Please contact Didier for full terms and conditions.

LIQUEUR Range: Tables - Square-ellipse top, single pedestal



LQ-TB.80x80[ELP] 800 W x 800 D x 730 H



LQ-TB.115x115[ELP] 1150 W x 1150 D x 730 H



LQ-TB.135x135[ELP] 1350 W x 1350 D x 730 H



LQ-TB.150x150[ELP] 1500 W x 1500 D x 730 H

LIQUEUR Range: Tables - Ellipse top, single pedestal



LQ-TB.150x120[ELP] 1500 W x 1200 D x 730 H



LQ-TB.180x120[ELP] 1800 W x 1200 D x 730 H



LQ-TB.180x135[ELP] 1800 W x 1350 D x 730 H

CONTINUED →

LIQUEUR Range: Tables 900mm - Ellipse top, dual pedestal



LQ-TB.180x90[ELP] 1800 W x 900 D x 730 H



LQ-TB.210x90[ELP] 2100 W x 900 D x 730 H



LQ-TB.240x90[ELP] 2400 W x 900 D x 730 H



LQ-TB.270x90[ELP] 2700 W x 900 D x 730 H

LIQUEUR Range: Tables 1200mm - Ellipse top, dual pedestal



LQ-TB.210x120[ELP] 2100 W x 1200 D x 730 H



LQ-TB.240x120[ELP] 2400 W x 1200 D x 730 H



LQ-TB.270x120[ELP] 2700 W x 1200 D x 730 H



LQ-TB.300x120[ELP] LQ-TB.300x120[ELP])



LQ-TB.330x120[ELP] 3300 W x 1200 D x 730 H



LQ-TB.360x120[ELP] 3600 W x 1200 D x 730 H

LIQUEUR Range: Tables 1350mm - Ellipse top, dual pedestal



LQ-TB.210x135[ELP] 2100 W x 1350 D x 730 H



LQ-TB.240x135[ELP] 2400 W x 1350 D x 730 H



LQ-TB.270x135[ELP] 2700 W x 1350 D x 730 H



LQ-TB.300x135[ELP] 3000 W x 1350 D x 730 H



LQ-TB.330x135[ELP] 3300 W x 1350 D x 730 H



LQ-TB.360x135[ELP] 3600 W x 1350 D x 730 H

CONTINUED →

LIQUEUR Range: Tables - Square top, single pedestal



LQ-TB.80X80[REC] 800 W x 800 D x 730 H



LQ-TB.115x115[REC] 1150 W x 1150 D x 730 H



LQ-TB.135x135[REC] 1350 W x 1350 D x 730 H



LQ-TB.150x150[REC] 1500 W x 1500 D x 730 H

LIQUEUR Range: Tables 900mm - Rectangle top, dual pedestal



LQ-TB.180x90[REC] 1800 W x 900 D x 730 H



LQ-TB.210x90[REC] 2100 W x 900 D x 730 H



LQ-TB.240x90[REC] 2400 W x 900 D x 730 H



LQ-TB.270x90[REC] 2700 W x 900 D x 730 H

LIQUEUR Range: Tables 1200mm - Rectangle top, dual pedestal



LQ-TB.210x120[REC] 2100 W x 1200 D x 730 H



LQ-TB.240x120[REC] 2400 W x 1200 D x 730 H



LQ-TB.270x120[REC] 2700 W x 1200 D x 730 H



LQ-TB.300x120[REC] 3000 W x 1200 D x 730 H



LQ-TB.330x120[REC] 3300 W x 1200 D x 730 H



LQ-TB.360x120[REC] 3600 W x 1200 D x 730 H

CONTINUED →

LIQUEUR Range: Tables 1200mm - Rectangle top, extended pedestal



LQ-TB.210x120[REC]_EXT BASE 2100 W x 1200 D x 730 H



LQ-TB.240x120[REC]_EXT BASE 1150 W x 1150 D x 730 H



LQ-TB.270x120[REC] _EXT BASE 2700 W x 1200 D x 730 H



LQ-TB.300x120[REC]_EXT BASE 3000 W x 1200 D x 730 H



LQ-TB.330x120[REC]_EXT BASE 3300 W x 1200 D x 730 H



LQ-TB.360x120[REC]_EXT BASE 3600 W x 1200 D x 730 H

LIQUEUR Range: Tables 1350mm - Rectangle top, dual pedestal



LQ-TB.210x135[REC] 2100 W x 1350 D x 730 H



LQ-TB.240x135[REC] 2400 W x 1350 D x 730 H



LQ-TB.270x135[REC] 2700 W x 1350 D x 730 H



LQ-TB.300x135[REC] 3000 W x 1350 D x 730 H



LQ-TB.330x135[REC] 3300 W x 1350 D x 730 H



LQ-TB.360x135[REC] 3600 W x 1350 D x 730 H

LIQUEUR Range: Tables 1350mm - Rectangle top, extended pedestal



LQ-TB.210x135[REC]_EXT BASE 2100 W x 1350 D x 730 H



LQ-TB.240x135[REC]_EXT BASE 2400 W x 1350 D x 730 H



LQ-TB.270x135[REC] _EXT BASE 2700 W x 1350 D x 730 H



LQ-TB.300x135[REC]_EXT BASE 3000 W x 1200 D x 730 H



LQ-TB.330x135[REC]_EXT BASE 3300 W x 1350 D x 730 H



LQ-TB.360x135[REC]_EXT BASE 3600 W x 1350 D x 730 H

CONTINUED →

LIQUEUR Range: Tables - Round top, single pedestal



LQ-TB.90-DIA 900 DIA x 730 H



LQ-TB.105-DIA 1050 DIA x 730 H



LQ-TB.120-DIA 1200 DIA x 730 H



LQ-TB.135-DIA 1350 DIA x 730 H



LQ-TB.150-DIA 1500 DIA x 730 H



LQ-TB.180-DIA 1800 DIA x 730 H

LIQUEUR Range: Tables - D-end top, single pedestal



LQ-TB.150x120[D-END] 1500 W x 1200 D x 730 H



LQ-TB.180x120[D-END] 1800 W x 1200 D x 730 H



LQ-TB.180x135[D-END] 1800 W x 1350 D x 730 H

LIQUEUR Range: Tables 900mm - D-end top, dual pedestal



LQ-TB.180x90[D-END] 1800 W x 900 D x 730 H



LQ-TB.210x90[D-END] 2100 W x 900 D x 730 H



LQ-TB.240x90[D-END] 2400 W x 900 D x 730 H



LQ-TB.270x90[D-END] 2700 W x 900 D x 730 H

CONTINUED →

LIQUEUR Range: Tables 1200mm - D-end top, dual pedestal


LQ-TB.210x120[D-END] 2100 W x 1200 D x 730 H


LQ-TB.240x120[D-END] 2400 W x 1200 D x 730 H


LQ-TB.270x120[D-END] 2700 W x 1200 D x 730 H


LQ-TB.300x120[D-END] 3000 W x 1200 D x 730 H


LQ-TB.330x120[D-END] 3300 W x 1200 D x 730 H


LQ-TB.360x120[D-END] 3600 W x 1200 D x 730 H

LIQUEUR Range: Tables 1200mm - D-end top, extended pedestal


LQ-TB.210x120[D-END]_EXT BASE 2100 W x 1200 D x 730 H


LQ-TB.240x120[D-END]_EXT BASE 2400 W x 1200 D x 730 H


LQ-TB.270x120[D-END] _EXT BASE 2700 W x 1200 D x 730 H


LQ-TB.300x120[D-END]_EXT BASE 3000 W x 1200 D x 730 H


LQ-TB.330x120[D-END]_EXT BASE 3300 W x 1200 D x 730 H


LQ-TB.360x120[D-END]_EXT BASE 3600 W x 1200 D x 730 H

LIQUEUR Range: Tables 1350mm - D-end top, dual pedestal


LQ-TB.210x135[D-END] 2100 W x 1350 D x 730 H


LQ-TB.240x135[D-END] 2400 W x 1350 D x 730 H


LQ-TB.270x135[D-END] 2700 W x 1350 D x 730 H


LQ-TB.300x135[D-END] 3000 W x 1350 D x 730 H


LQ-TB.330x135[D-END] 3300 W x 1350 D x 730 H


LQ-TB.360x135[D-END] 3600 W x 1350 D x 730 H

CONTINUED →

LIQUEUR Range: Tables 1350mm - D-end top, extended pedestal



LQ-TB.210x135[D-END]_EXT BASE 2100 W x 1350 D x 730 H



LQ-TB.240x135[D-END]_EXT BASE 2400 W x 1350 D x 730 H



LQ-TB.270x135[D-END] _EXT BASE 2700 W x 1350 D x 730 H



LQ-TB.300x135[D-END]_EXT BASE 3000 W x 1350 D x 730 H



LQ-TB.330x135[D-END]_EXT BASE 3300 W x 1350 D x 730 H



LQ-TB.360x135[D-END]_EXT BASE 3600 W x 1350 D x 730 H

LIQUEUR Range: Bar Tables - Square-ellipse top, single pedestal (available in two heights: 930 & 1030mm)



LQ-BTB[93/103].80x80[ELP] 800 W x 800 D x 930/1030 H



LQ-BTB[93/103].115x115[ELP] 1150 W x 1150 D x 930/1030 H



LQ-BTB[93/103].135x135[ELP] 1350 W x 1350 D x 930/1030 H



LQ-BTB[93/103].150x150[ELP] 1500 W x 1500 D x 930/1030 H

LIQUEUR Range: Bar Tables - Ellipse top, single pedestal (available in two heights: 930 & 1030mm)



LQ-BTB[93/103].150x120[ELP] 1500 W x 1350 D x 930/1030 H



LQ-BTB[93/103].180x120[ELP] 1800 W x 1200 D x 930/1030 H



LQ-BTB[93/103].180x135[ELP] 1800 W x 1350 D x 930/1030 H

LIQUEUR Range: Bar Tables 900mm - Ellipse top, dual pedestal (available in two heights: 930 & 1030mm)



LQ-BTB[93/103].180x90[ELP] 1800 W x 900 D x 930/1030 H



LQ-BTB[93/103].210x90[ELP] 2100 W x 900 D x 930/1030 H



LQ-BTB[93/103].240x90[ELP] 2400 W x 900 D x 930/1030 H



LQ-BTB[93/103].270x90[ELP] 2700 W x 900 D x 930/1030 H

CONTINUED →

LIQUEUR Range: Bar Tables 1200mm - Ellipse top, dual pedestal (available in two heights: 930 & 1030mm)



LQ-BTB[93/103].210x120[ELP] 2100 W x 1200 D x 930/1030 H



LQ-BTB[93/103].240x120[ELP] 2400 W x 1200 D x 930/1030 H



LQ-BTB[93/103].270x120[ELP] 2700 W x 1200 D x 930/1030 H



LQ-BTB[93/103].300x120[ELP] 3000 W x 1200 D x 930/1030 H



LQ-BTB[93/103].330x120[ELP] 3300 W x 1200 D x 930/1030 H



LQ-BTB[93/103].360x120[ELP] 3600 W x 1200 D x 930/1030 H

LIQUEUR Range: Bar Tables 1350mm - Ellipse top, dual pedestal (available in two heights: 930 & 1030mm)



LQ-BTB[93/103].210x135[ELP] 2100 W x 1350 D x 930/1030 H



LQ-BTB[93/103].240x135[ELP] 2400 W x 1350 D x 930/1030 H



LQ-BTB[93/103].270x135[ELP] 2700 W x 1350 D x 930/1030 H



LQ-BTB[93/103].300x135[ELP] 3000 W x 1350 D x 930/1030 H



LQ-BTB[93/103].330x135[ELP] 3300 W x 1350 D x 930/1030 H



LQ-BTB[93/103].360x135[ELP] 3600 W x 1350 D x 930/1030 H

LIQUEUR Range: Bar Tables - Square top, single pedestal (available in two heights: 930 & 1030mm)



LQ-BTB[93/103].80X80[REC] 800 W x 800 D x 930/1030 H



LQ-BTB[93/103].115x115[REC] 1150 W x 1150 D x 930/1030 H



LQ-BTB[93/103].135x135[REC] 1350 W x 1350 D x 930/1030 H



LQ-BTB[93/103].150x150[REC] 1500 W x 1500 D x 930/1030 H

CONTINUED →

LIQUEUR Range: Bar Tables 900mm - Rectangle top, dual pedestal (available in two heights: 930 & 1030mm)



LQ-BTB[93/103].180x90[REC] 1800 W x 900 D x 930/1030 H



LQ-BTB[93/103].210x90[REC] 2100 W x 900 D x 930/1030 H



LQ-BTB[93/103].240x90[REC] 2400 W x 900 D x 930/1030 H



LQ-BTB[93/103].270x90[REC] 2700 W x 900 D x 930/1030 H

LIQUEUR Range: Bar Tables 1200mm - Rectangle top, dual pedestal (available in two heights: 930 & 1030mm)



LQ-BTB[93/103].210x120[REC] 2100 W x 1200 D x 930/1030 H



LQ-BTB[93/103].240x120[REC] 2400 W x 1200 D x 930/1030 H



LQ-BTB[93/103].270x120[REC] 2700 W x 1200 D x 930/1030 H



LQ-BTB[93/103].300x120[REC] 3000 W x 1200 D x 730 H



LQ-BTB[93/103].330x120[REC] 3300 W x 1200 D x 930/1030 H



LQ-BTB[93/103].360x120[REC] 3600 W x 1200 D x 930/1030 H

LIQUEUR Range: Bar Tables 1200mm - Rectangle top, extended pedestal (available in two heights: 930 & 1030mm)



LQ-BTB[93/103].210x120[REC]_EXT BASE 2100 W x 1200 D x 930/1030 H



LQ-BTB[93/103].240x120[REC]_EXT BASE 2400 W x 1200 D x 930/1030 H



LQ-BTB[93/103].270x120[REC] _EXT BASE 2700 W x 1200 D x 930/1030 H



LQ-BTB[93/103].300x120[REC]_EXT BASE 3000 W x 1200 D x 930/1030 H



LQ-BTB[93/103].330x120[REC]_EXT BASE 3300 W x 1200 D x 930/1030 H



LQ-BTB[93/103].360x120[REC]_EXT BASE 3600 W x 1200 D x 930/1030 H

CONTINUED →

LIQUEUR Range: Bar Tables 1350mm - Rectangle top, dual pedestal (available in two heights: 930 & 1030mm)



LQ-BTB[93/103].210x135[REC] 2100 W x 1350 D x 930/1030 H



LQ-BTB[93/103].240x135[REC] 2400 W x 1350 D x 930/1030 H



LQ-BTB[93/103].270x135[REC] 2700 W x 1350 D x 930/1030 H



LQ-BTB[93/103].300x135[REC] 3000 W x 1350 D x 930/1030 H



LQ-BTB[93/103].330x135[REC 3300 W x 1350 D x 930/1030 H



LQ-BTB[93/103].360x135[REC] 3600 W x 1350 D x 930/1030 H

LIQUEUR Range: Bar Tables 1350mm - Rectangle top, extended pedestal (available in two heights: 930 & 1030mm)



LQ-BTB[93/103].210x135[REC]_EXT BASE 2100 W x 1350 D x 930/1030 H



LQ-BTB[93/103].240x135[REC]_EXT BASE 2400 W x 1350 D x 930/1030 H



LQ-BTB[93/103].270x135[REC] _EXT BASE 2700 W x 1350 D x 930/1030 H



LQ-BTB[93/103].300x135[REC]_EXT BASE 3000 W x 1350 D x 930/1030 H



LQ-BTB[93/103].330x135[REC]_EXT BASE 3300 W x 1350 D x 930/1030 H



LQ-BTB[93/103].360x135[REC]_EXT BASE 3600 W x 1350 D x 930/1030 H

LIQUEUR Range: Bar Tables - Round top, single pedestal (available in two heights: 930 & 1030mm)



LQ-BTB[93/103].90-DIA 900 DIA x 930/1030 H



LQ-BTB[93/103].105-DIA 1050 DIA x 930/1030 H



LQ-BTB[93/103].120-DIA 1200 DIA x 930/1030 H



LQ-BTB[93/103].135-DIA 1350 DIA x 930/1030 H



LQ-BTB[93/103].150-DIA 1500 DIA x 930/1030 H



LQ-BTB[93/103].180-DIA 1800 DIA x 930/1030 H

CONTINUED →

LIQUEUR Range: Bar Tables - D-end top, single pedestal (available in two heights: 930 & 1030mm)



LQ-BTB[93/103].150x120[D-END] 1500 W x 1200 D x 930/1030 H



LQ-BTB[93/103].180x120[D-END] 1800 W x 1200 D x 930/1030 H



LQ-BTB[93/103].180x135[D-END] 1800 W x 1350 D x 930/1030 H

LIQUEUR Range: Bar Tables 900mm - D-end top, dual pedestal (available in two heights: 930 & 1030mm)



LQ-BTB[93/103].180x90[D-END] 1800 W x 900 D x 930/1030 H



LQ-BTB[93/103].210x90[D-END] 2100 W x 900 D x 930/1030 H



LQ-BTB[93/103].240x90[D-END] 2400 W x 900 D x 930/1030 H



LQ-BTB[93/103].270x90[D-END] 2700 W x 900 D x 930/1030 H

LIQUEUR Range: Bar Tables 1200mm - D-end top, dual pedestal (available in two heights: 930 & 1030mm)



LQ-BTB[93/103].210x120[D-END] 2100 W x 1200 D x 930/1030 H



LQ-BTB[93/103].240x120[D-END] 2400 W x 1200 D x 930/1030 H



LQ-BTB[93/103].270x120[D-END] 2700 W x 1200 D x 930/1030 H



LQ-BTB[93/103].300x120[D-END] 3000 W x 1200 D x 930/1030 H



LQ-BTB[93/103].330x120[D-END] 3300 W x 1200 D x 930/1030 H



LQ-BTB[93/103].360x120[D-END] 3600 W x 1200 D x 930/1030 H

CONTINUED →

LIQUEUR Range: Bar Tables 1200mm - D-end top, extended pedestal (available in two heights: 930 & 1030mm)


LQ-BTB[93/103].210x120[D-END]_EXT BASE 2100 W x 1200 D x 930/1030 H


LQ-BTB[93/103].240x120[D-END]_EXT BASE 2400 W x 1200 D x 930/1030 H


LQ-BTB[93/103].270x120[D-END] _EXT BASE 2700 W x 1200 D x 930/1030 H


LQ-BTB[93/103].300x120[D-END]_EXT BASE 3000 W x 1200 D x 930/1030 H


LQ-BTB[93/103].330x120[D-END]_EXT BASE 3300 W x 1200 D x 930/1030 H


LQ-BTB[93/103].360x120[D-END]_EXT BASE 3600 W x 1200 D x 930/1030 H

LIQUEUR Range: Bar Tables 1350mm - D-end top, dual pedestal (available in two heights: 930 & 1030mm)


LQ-BTB[93/103].210x135[D-END] 2100 W x 1350 D x 930/1030 H


LQ-TB[93/103].240x135[D-END] 2400 W x 1350 D x 930/1030 H


LQ-TB[93/103].270x135[D-END] 2700 W x 1350 D x 930/1030 H


LQ-TB[93/103].300x135[D-END] 3000 W x 1350 D x 930/1030 H


LQ-TB[93/103].330x135[D-END] 3300 W x 1350 D x 930/1030 H


LQ-TB[93/103].360x135[D-END] 3600 W x 1350 D x 930/1030 H

LIQUEUR Range: Bar Tables 1350mm - D-end top, extended pedestal (available in two heights: 930 & 1030mm)


LQ-BTB[93/103].210x135[D-END]_EXT BASE 2100 W x 1350 D x 930/1030 H


LQ-BTB[93/103].240x135[D-END]_EXT BASE 2400 W x 1350 D x 930/1030 H


LQ-BTB[93/103].270x135[D-END] _EXT BASE 2700 W x 1350 D x 930/1030 H


LQ-BTB[93/103].300x135[D-END]_EXT BASE 3000 W x 1350 D x 930/1030 H


LQ-BTB[93/103].330x135[D-END]_EXT BASE 3300 W x 1350 D x 930/1030 H


LQ-BTB[93/103].360x135[D-END]_EXT BASE 3600 W x 1350 D x 930/1030 H

CONTINUED →

LIQUEUR Range: Coffee Tables - Round top, single pedestal



LQ-CTB.60-DIA 600 DIA x 450 H



LQ-CTB.75-DIA 750 DIA x 450 H



LQ-CTB.90-DIA 900 DIA x 450 H



LQ-CTB.105-DIA 1050 DIA x 450 H



LQ-CTB.120-DIA 1200 DIA x 450 H



LQ-CTB.135-DIA 1350 DIA x 450 H



LQ-CTB.150-DIA 1500 DIA x 450 H

CARE INSTRUCTIONS:

- Dust and wipe timber with a soft, damp cloth.
- Gently clean any marks with a soft dampened cloth then dry.
- Avoid areas with heat, direct sunlight and moisture fluctuating temperatures.
- Didier recommends always reading the label of any cleaning products and not using cleaning agents containing abrasives or solvents.

ENVIRONMENTAL STATEMENT:

At Didier, we believe good design should enhance life without costing the earth. Our work is rooted in responsibility - sourcing sustainable materials, minimising waste in production and collaborating closely with skilled makers, prioritising ethical supply chains. We design for longevity, creating enduring pieces that stand the test of time. To us, sustainability is not a trend, but a guiding principle, that is woven into every stage of our artistic process and every original idea we bring to life.

Didier

LIQUEUR TABLE

LQ_TB.120x90



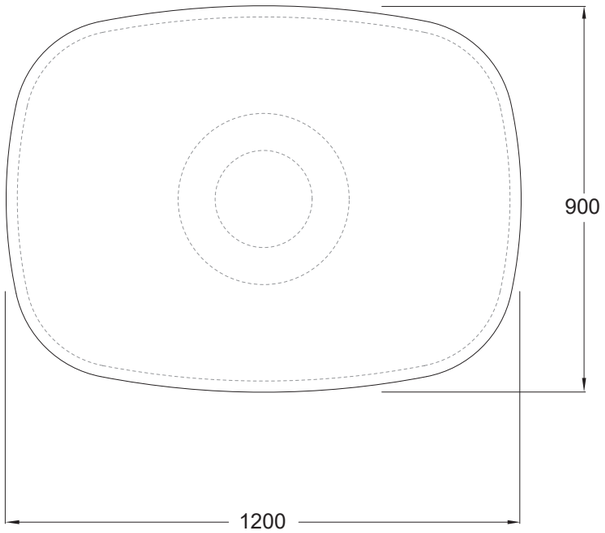

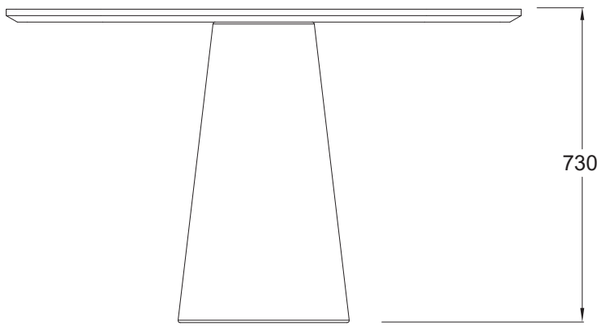

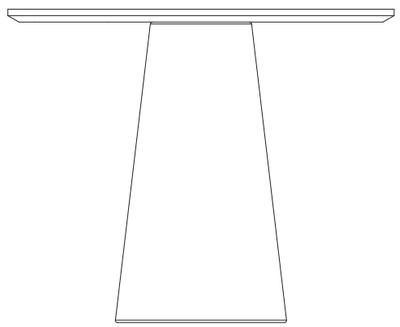

Didier®

LIQUEUR TABLE

LQ_TB.180x90



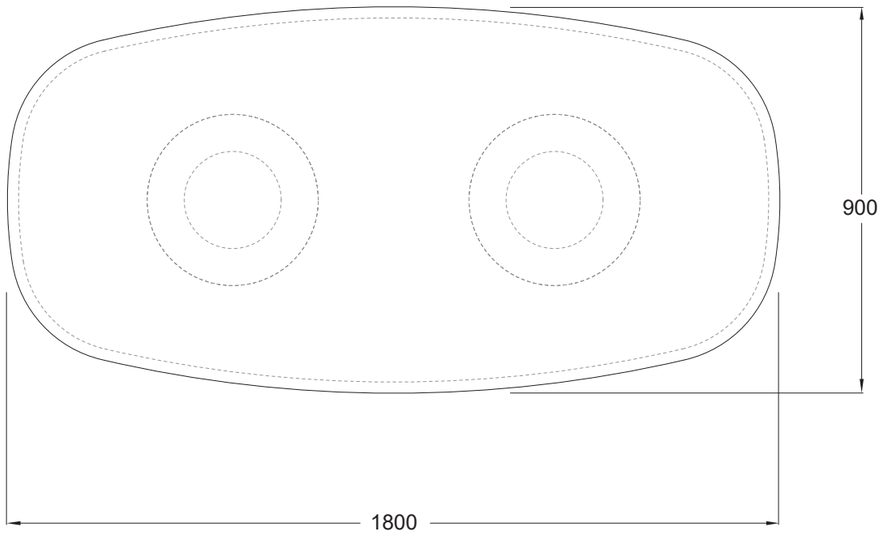

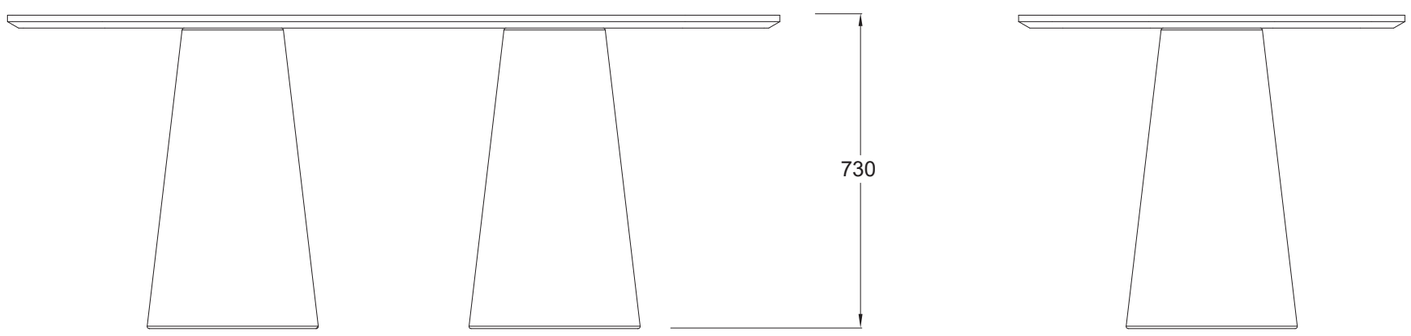

Didier™

LIQUEUR TABLE

LQ_TB.210x90



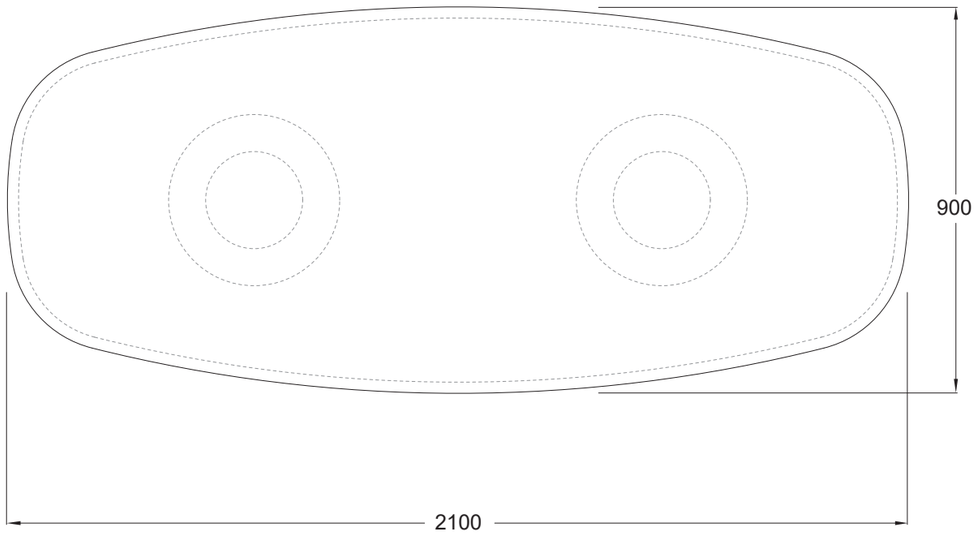

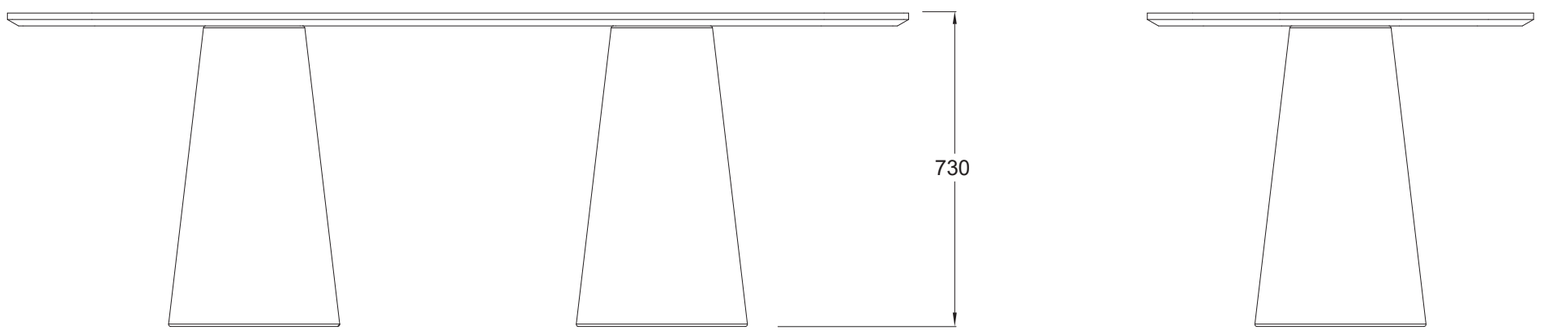

Didier™

LIQUEUR TABLE

LQ_TB.240x90



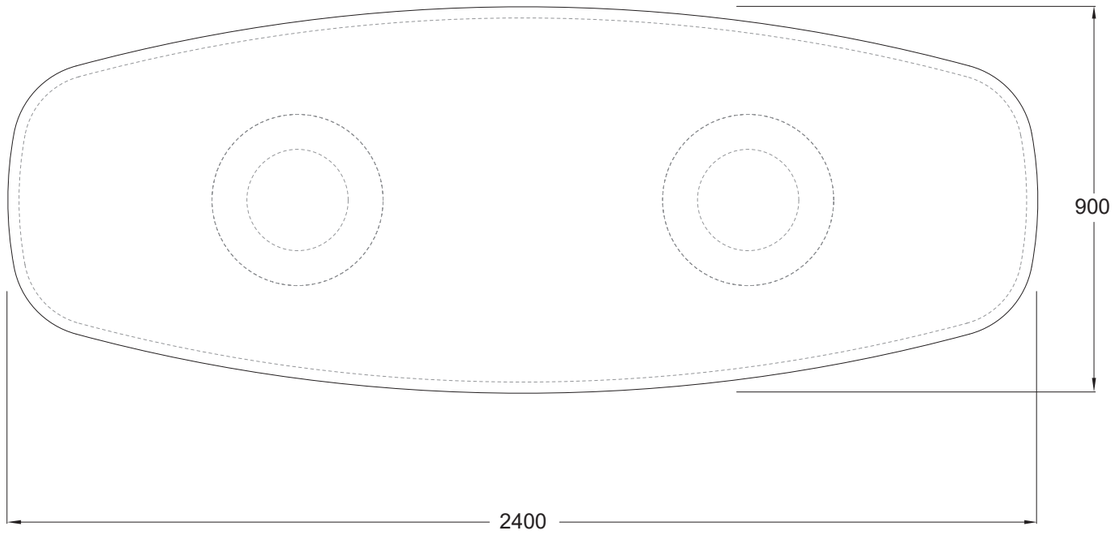

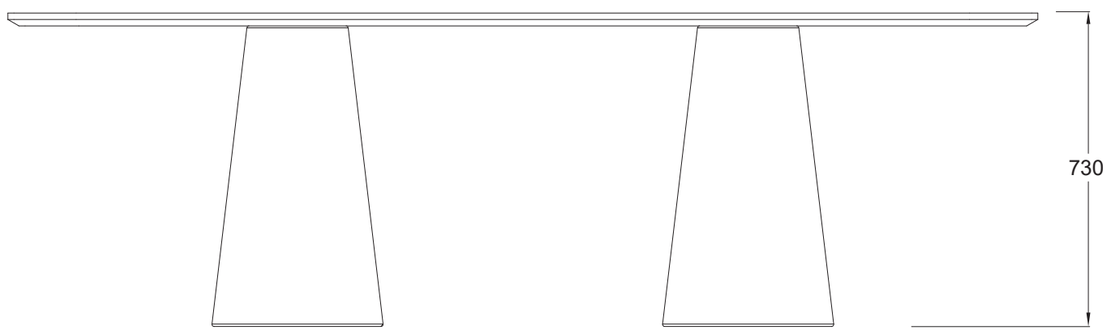

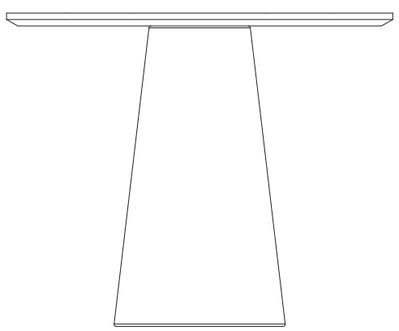

Didier™

LIQUEUR TABLE

LQ_TB.270x90



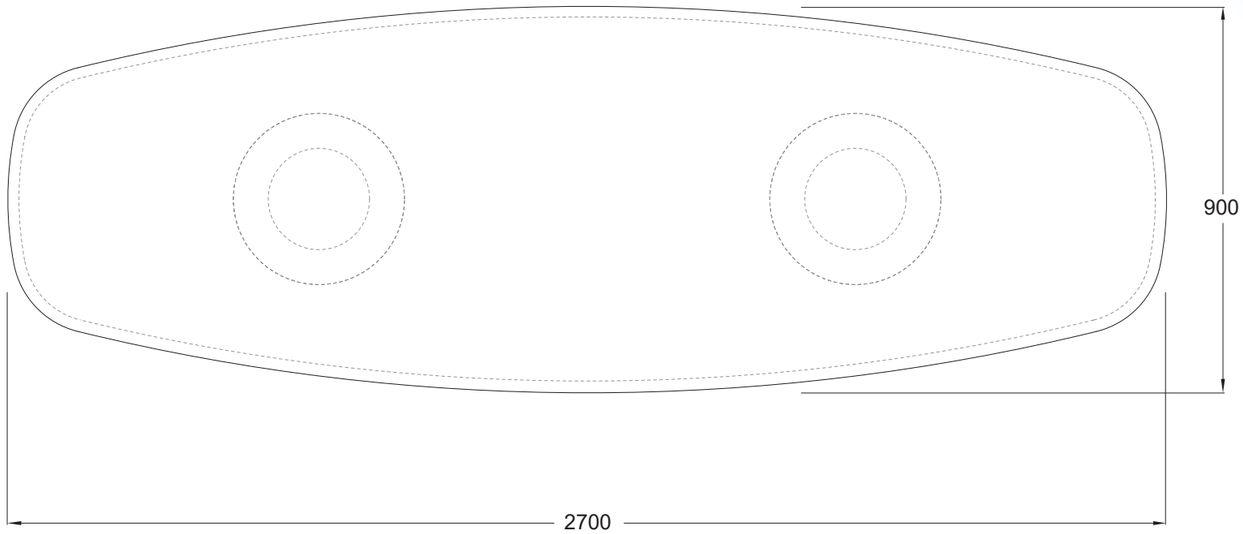

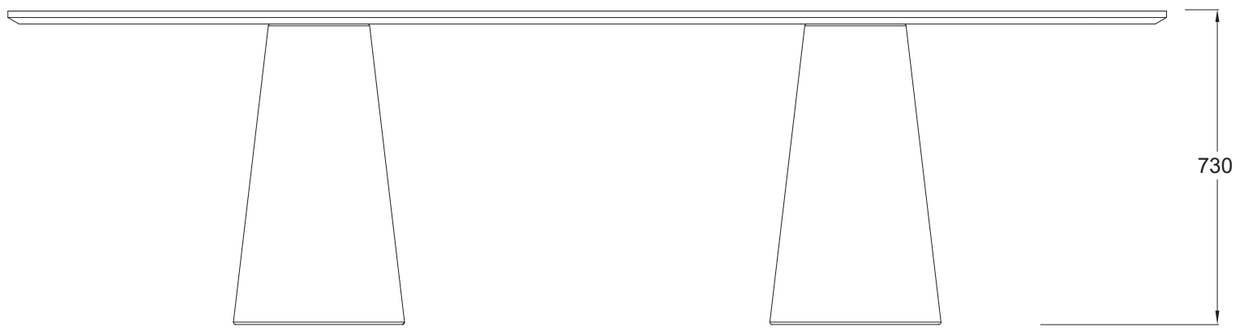

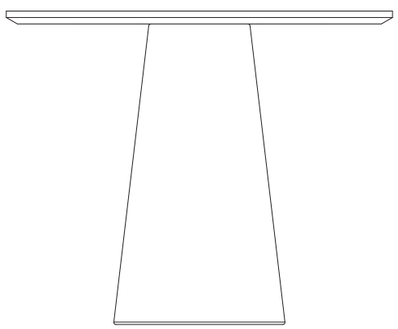

Didier™

LIQUEUR TABLE

LQ_TB.180x90[RECT]



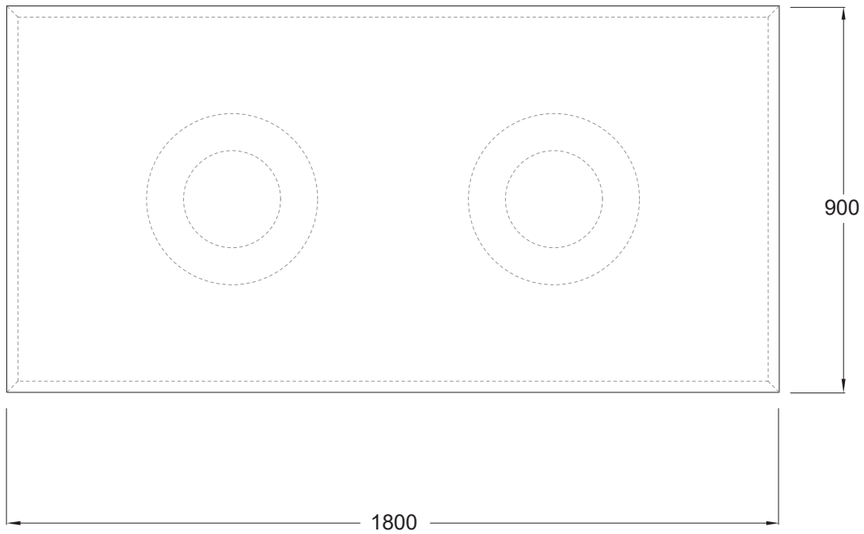

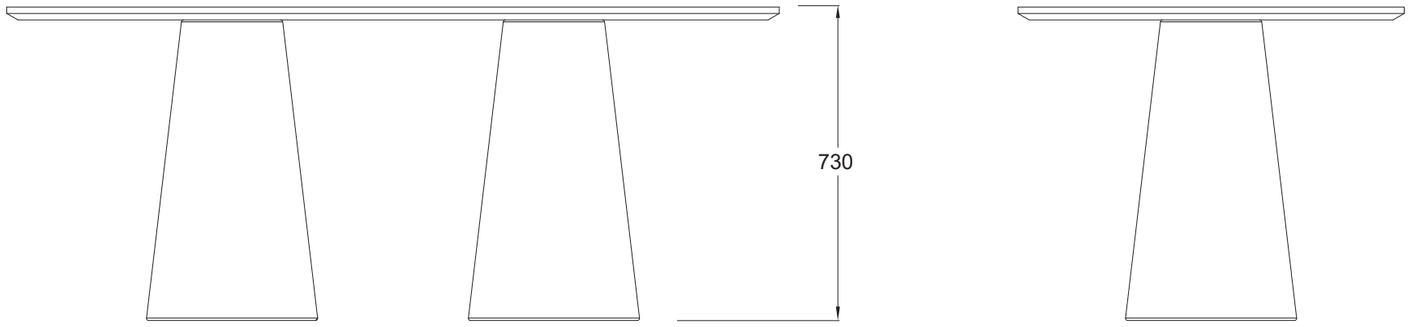

Didier™

LIQUEUR TABLE

LQ_TB.210x90[RECT]



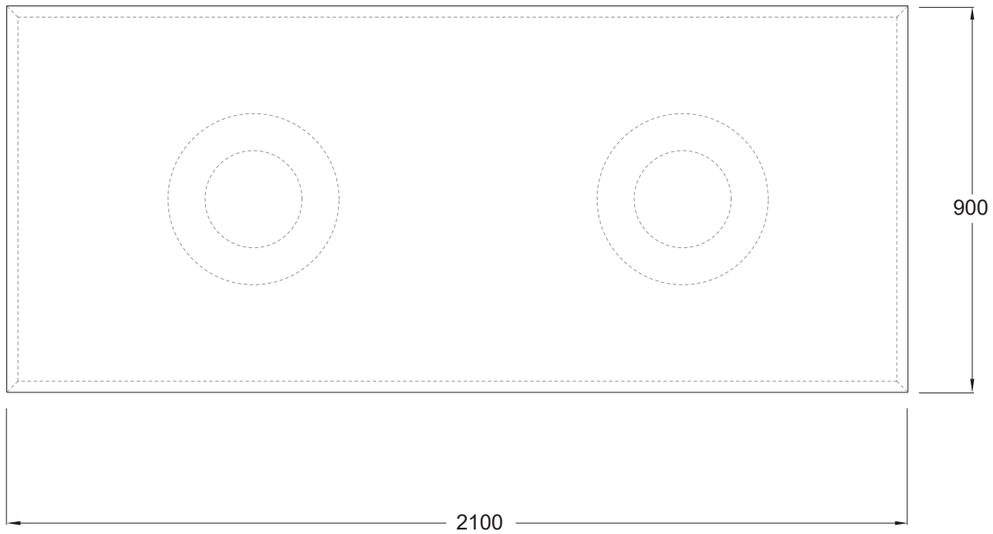

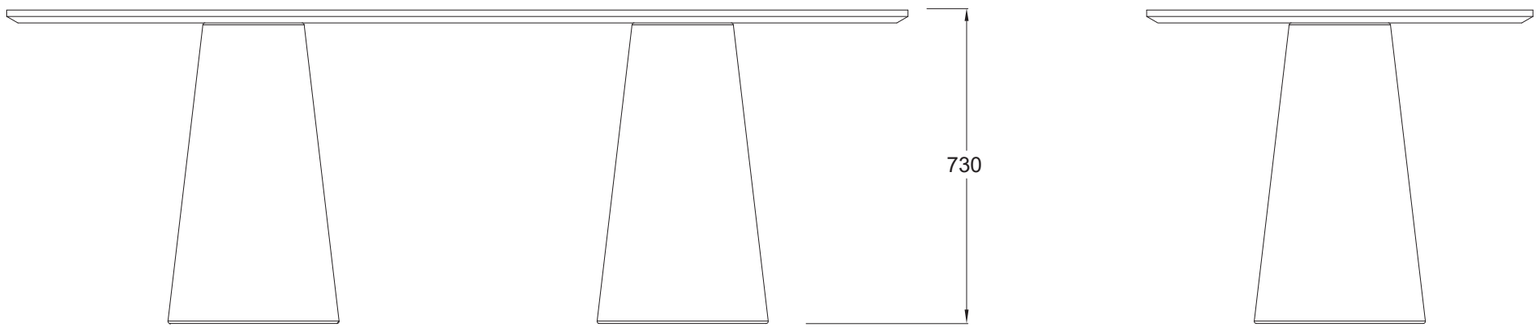

Didier™

LIQUEUR TABLE

LQ_TB.240x90[RECT]



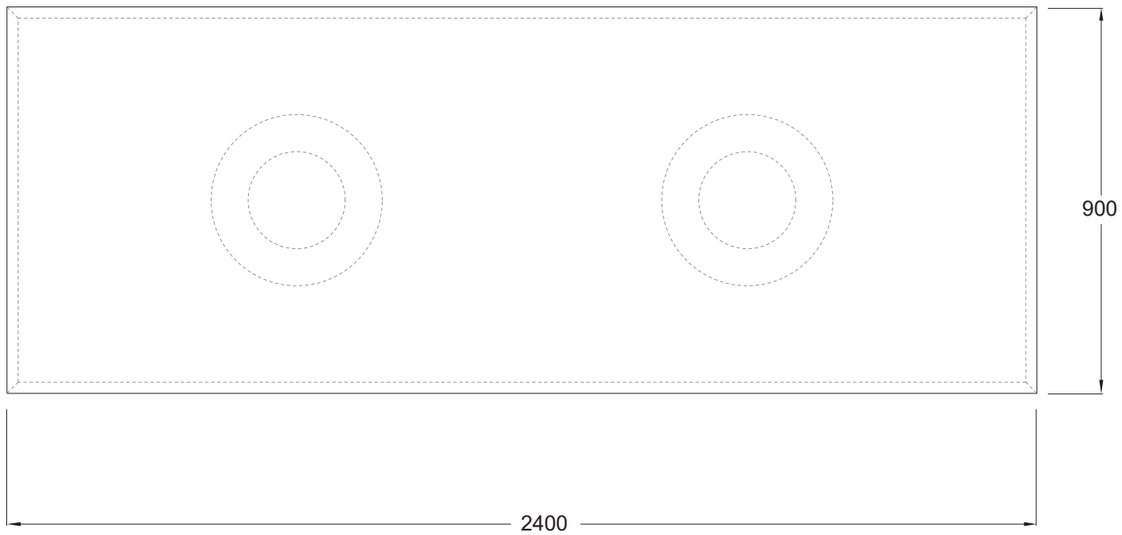

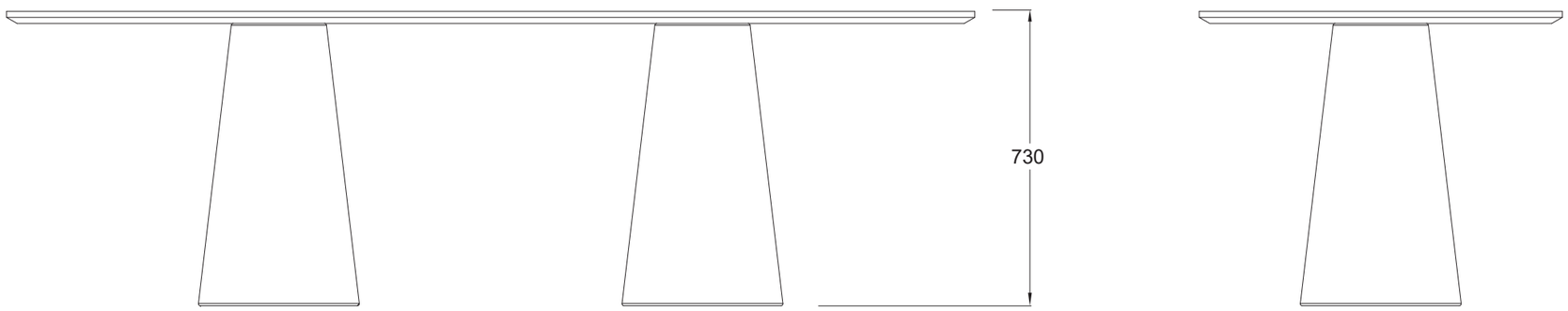

Didier™

LIQUEUR TABLE

LQ_TB.270x90[RECT]



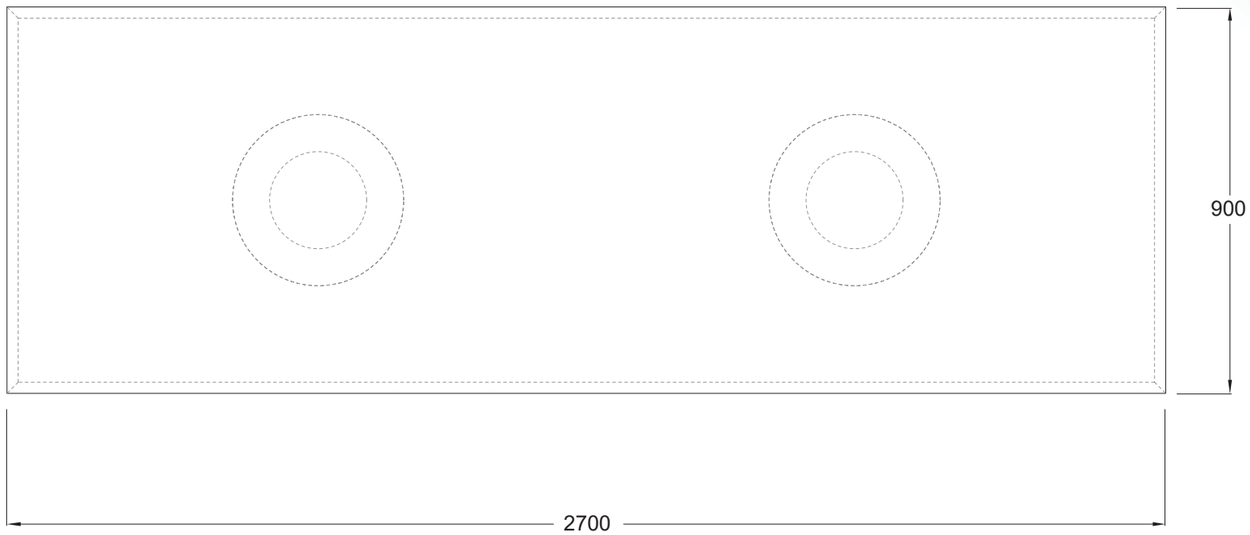

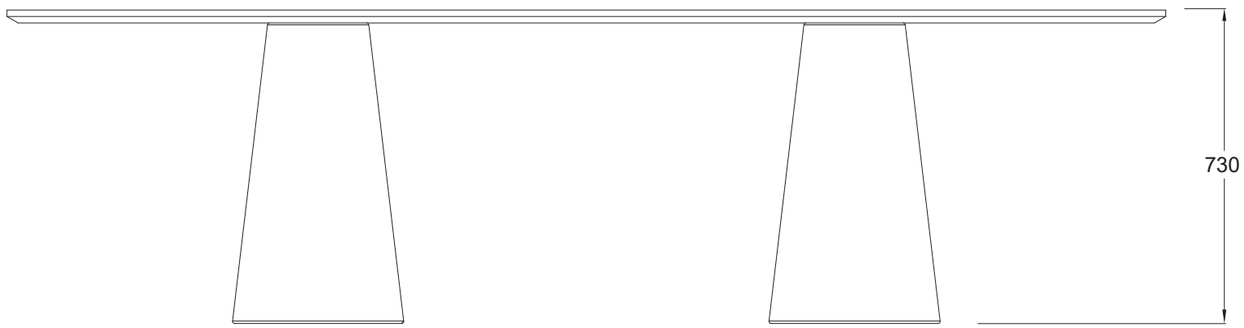

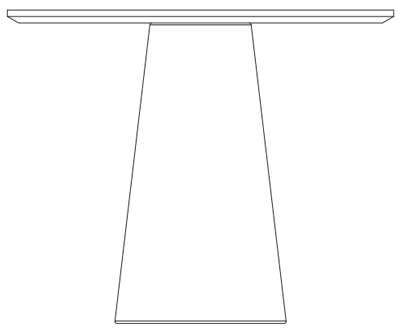

Didier™

LIQUEUR TABLE

LQ_TB.80x80[SML]

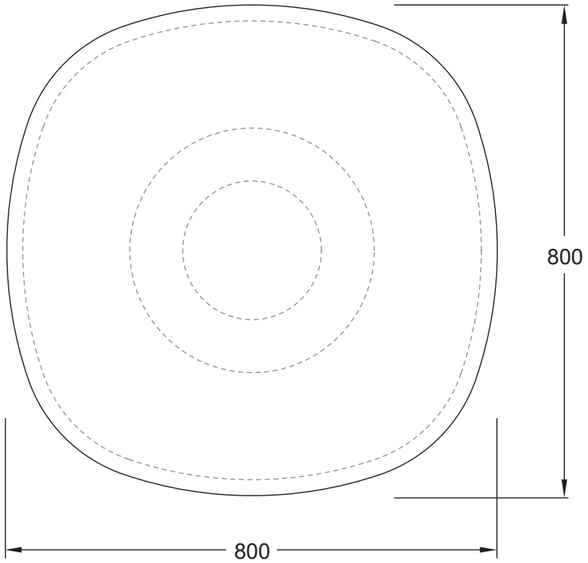

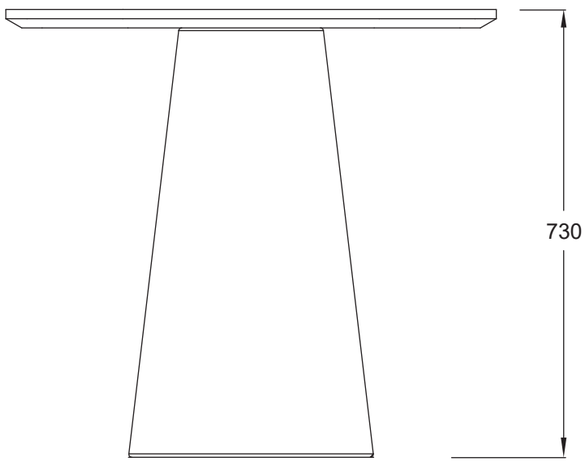



Didier™

LIQUEUR TABLE

LQ_TB.105x105[SML]

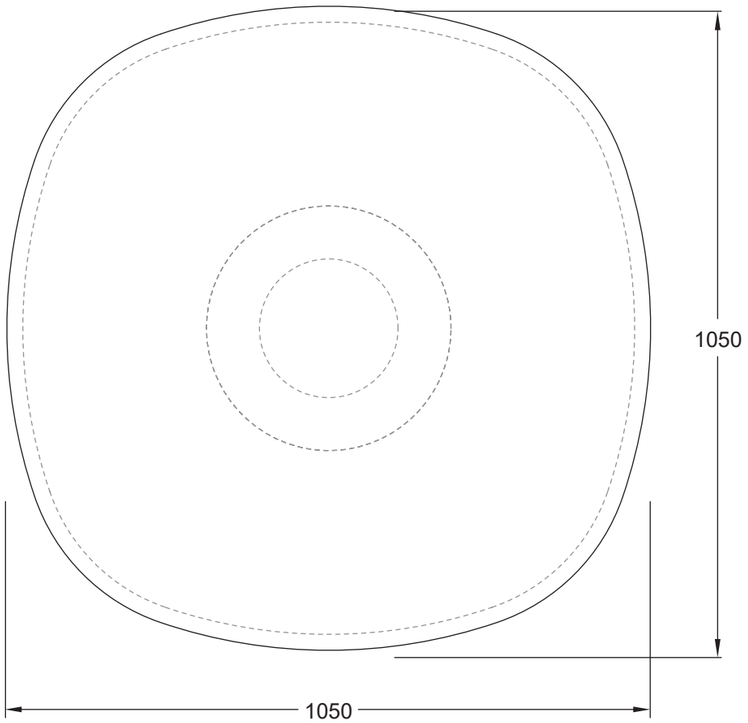



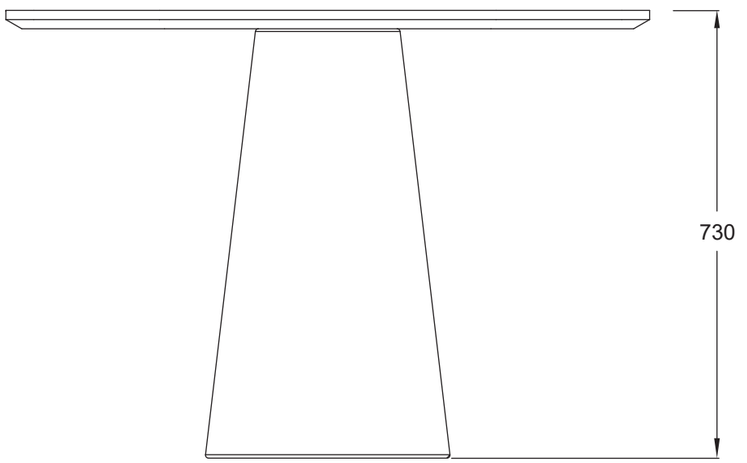

Didier™

LIQUEUR TABLE

LQ_TB.120x90



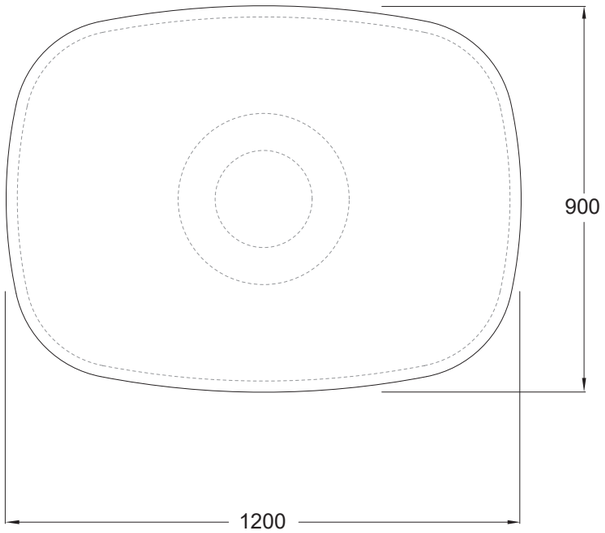

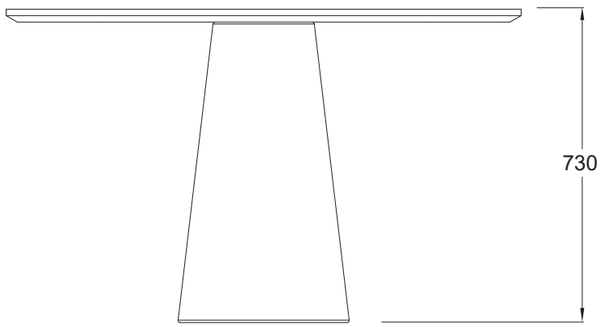

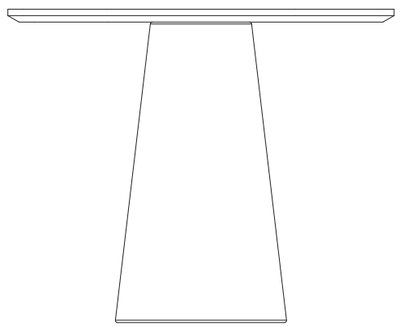

Didier®

LIQUEUR TABLE

LQ_TB.180x90[RECT]



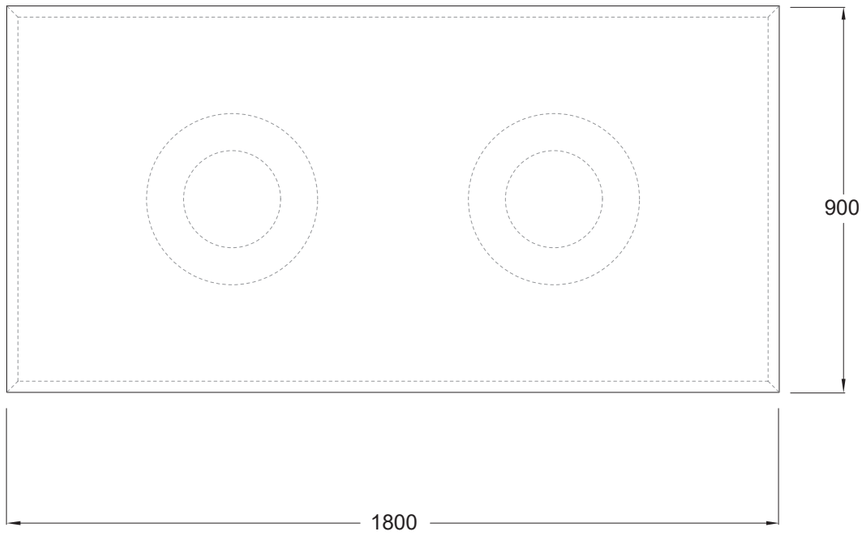

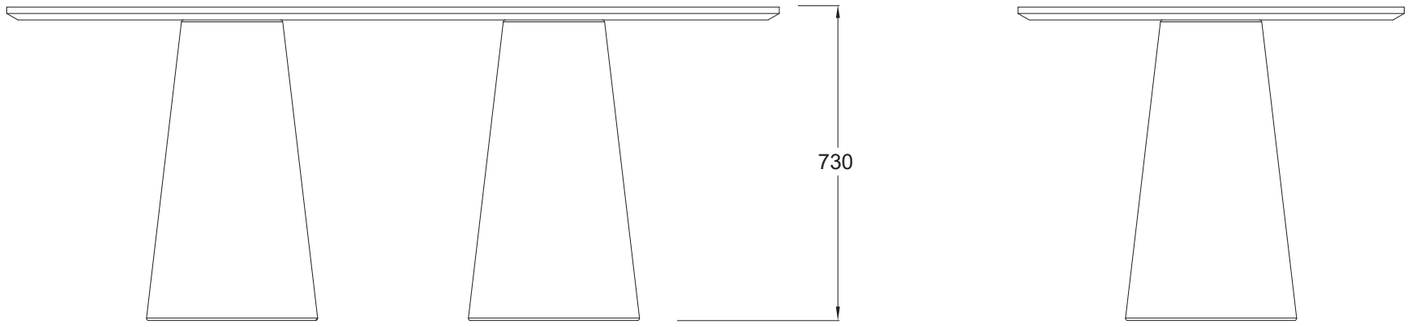

Didier™

LIQUEUR TABLE

LQ_TB.90-DIA[SML]

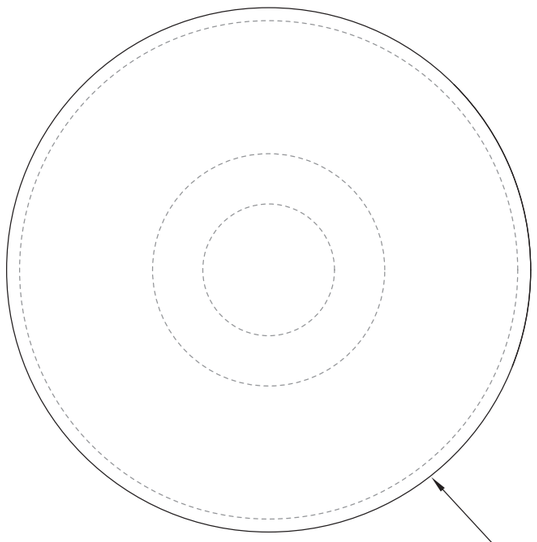

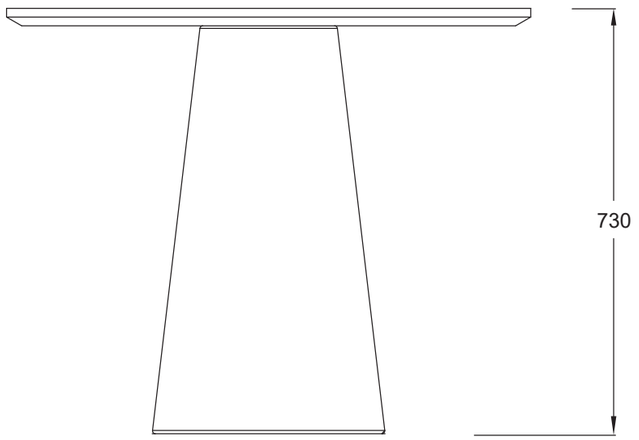



Didier™

LIQUEUR TABLE

LQ_TB.80x80[SML]

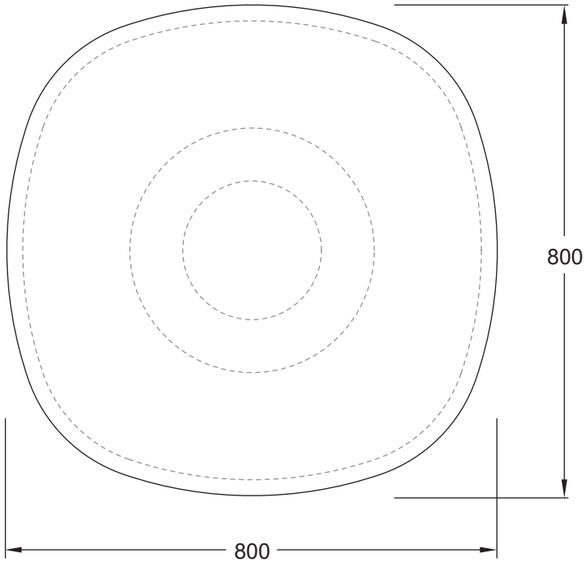

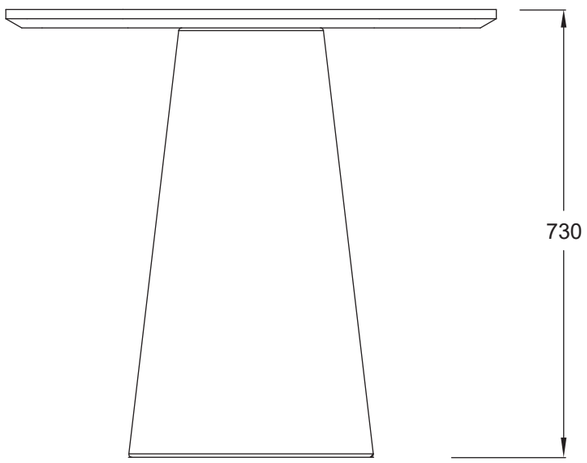



Didier™

LIQUEUR TABLE

LQ_TB.180x90



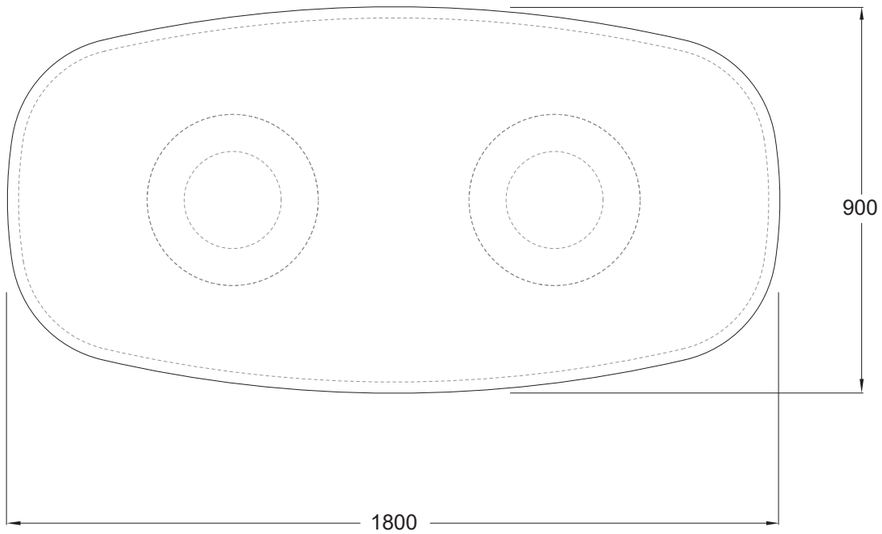

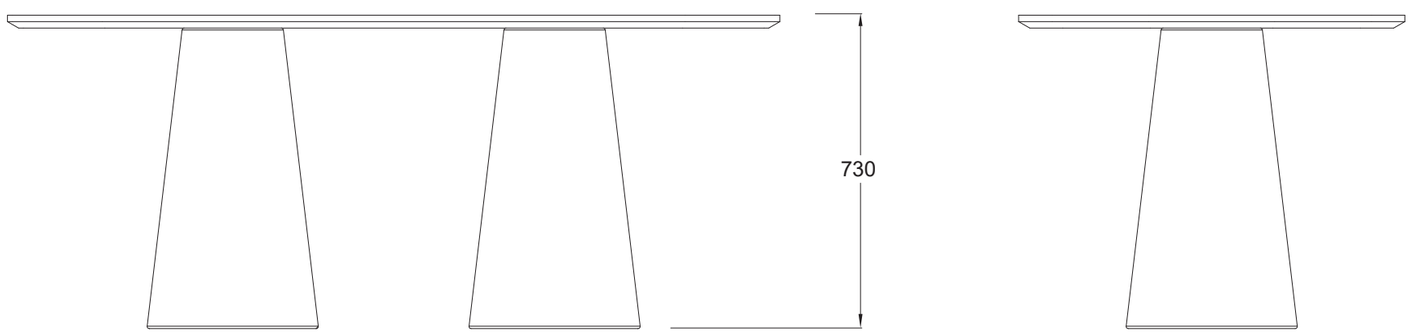

Didier™

LIQUEUR TABLE

LQ_TB.210x90[RECT]



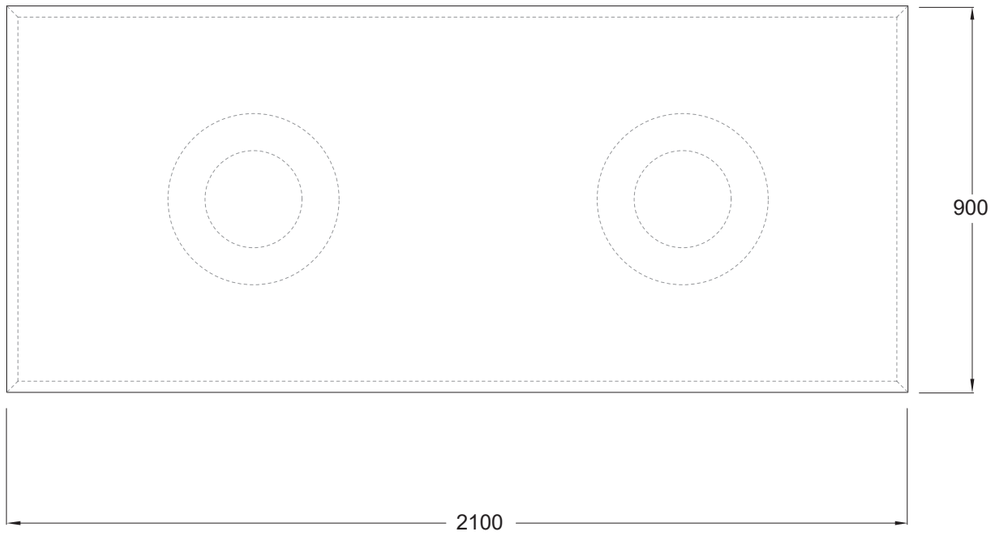

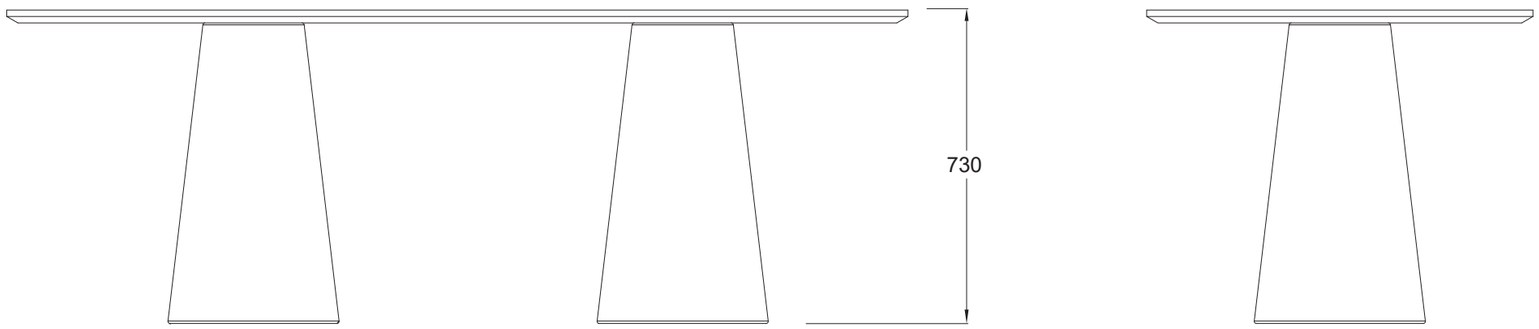

Didier™

LIQUEUR TABLE

LQ_TB.105-DIA[SML]

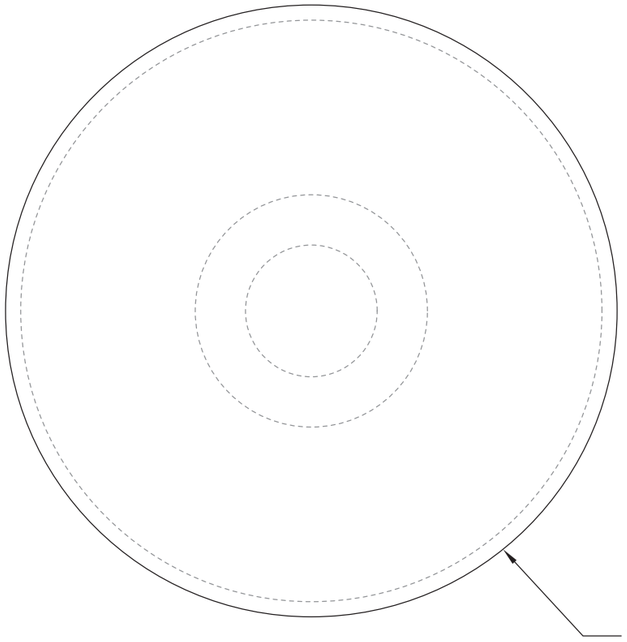

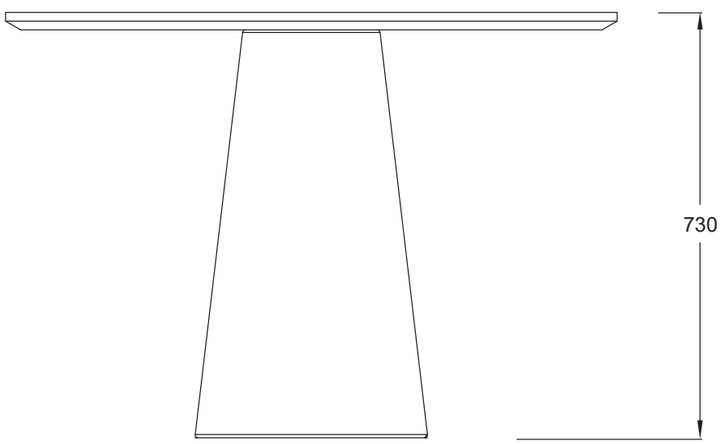



Didier™

LIQUEUR TABLE

LQ_TB.105x105[SML]

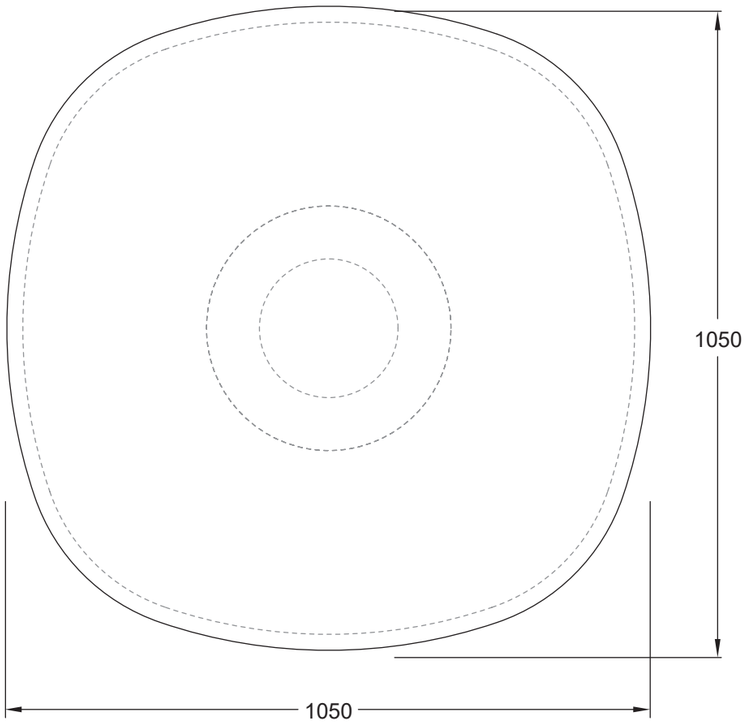



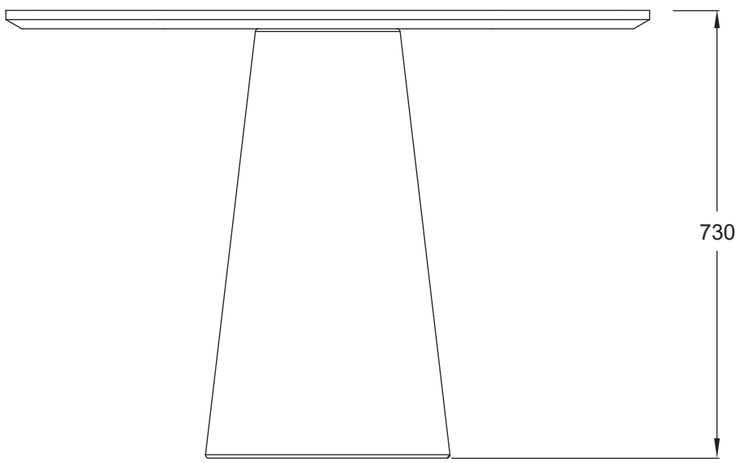

Didier™

LIQUEUR TABLE

LQ_TB.210x90



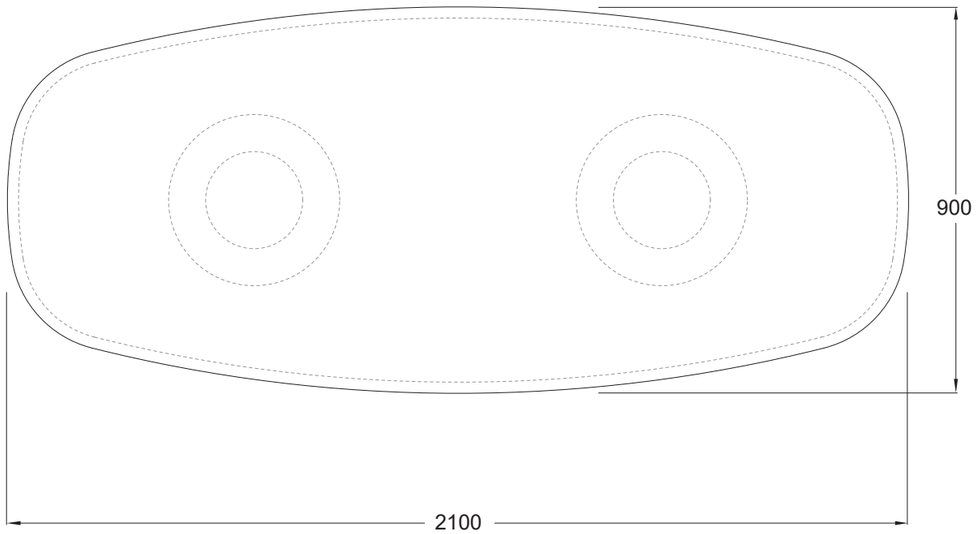

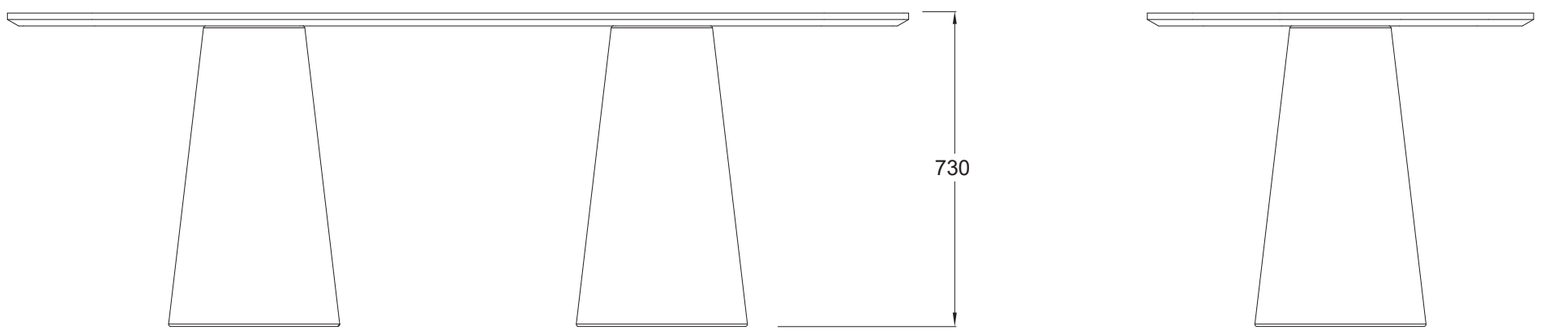

Didier™

LIQUEUR TABLE

LQ_TB.240x90[RECT]



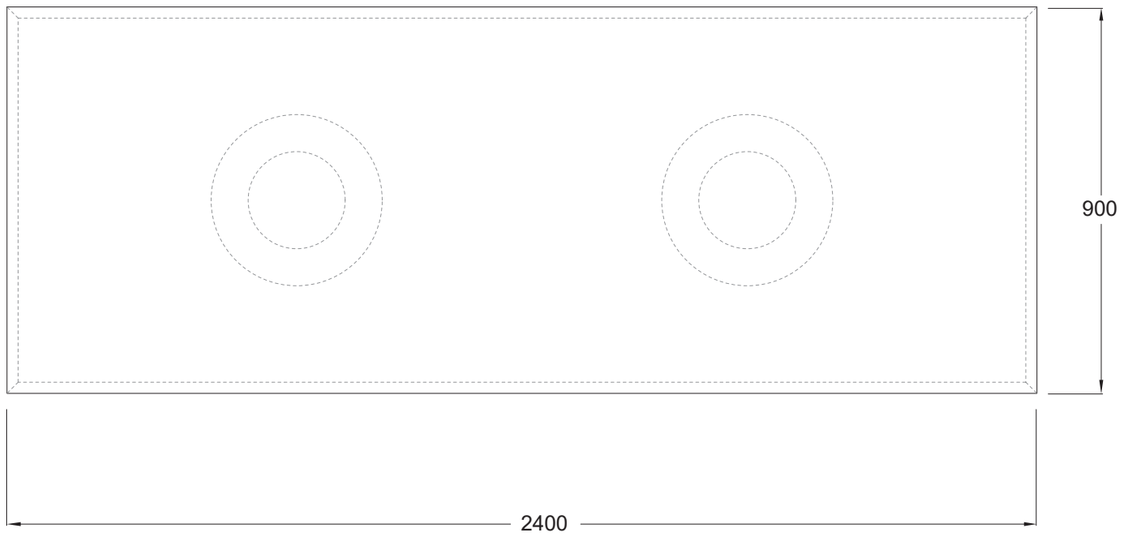

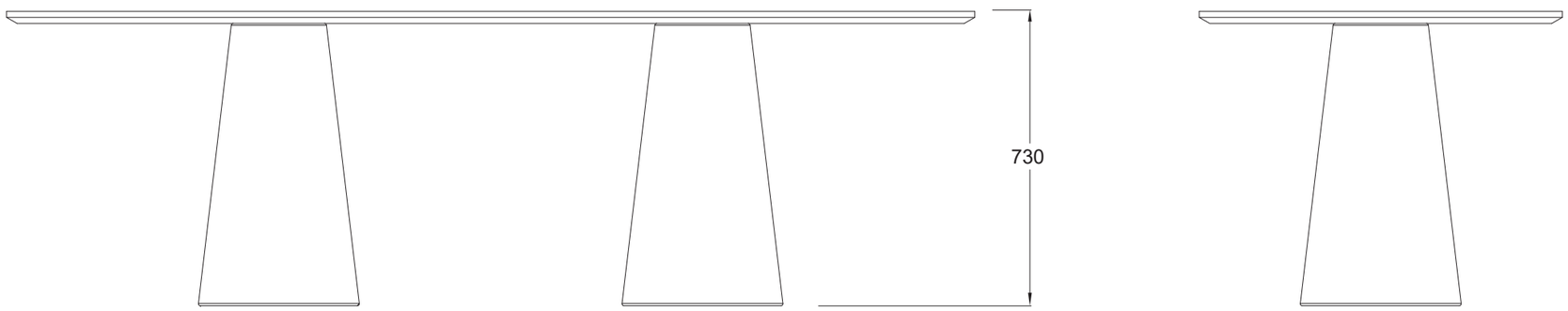

Didier™

LIQUEUR TABLE

LQ_TB.240x90



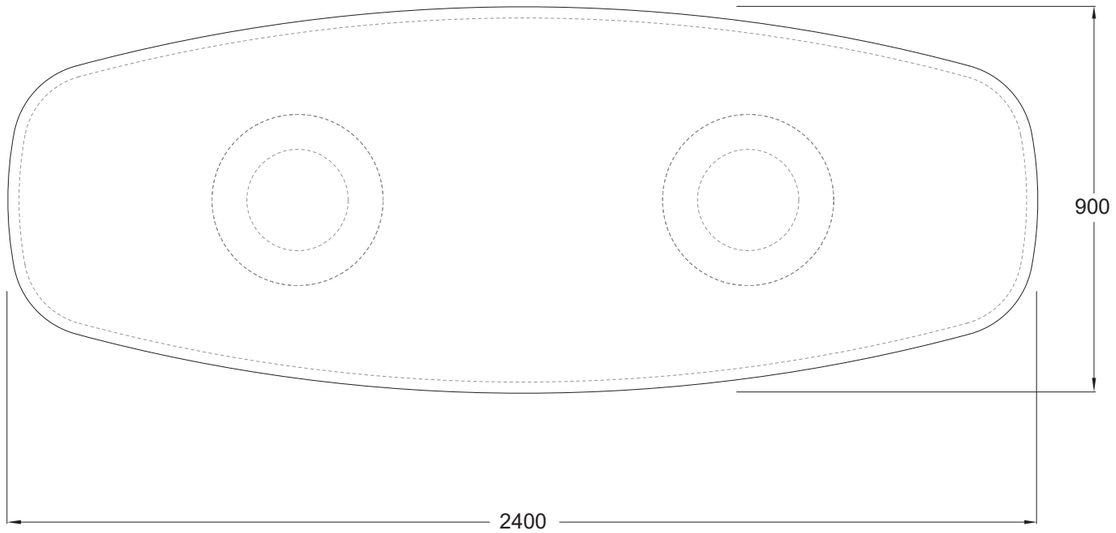

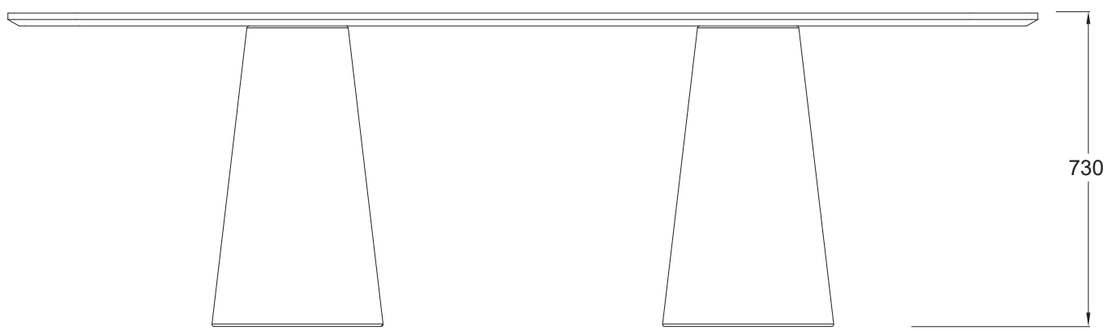

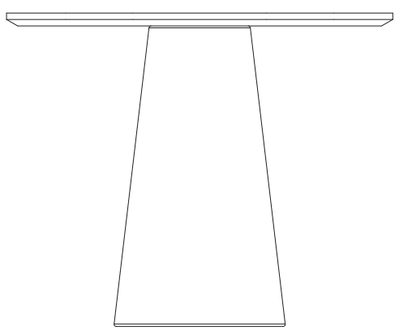

Didier™

LIQUEUR TABLE

LQ_TB.270x90[RECT]



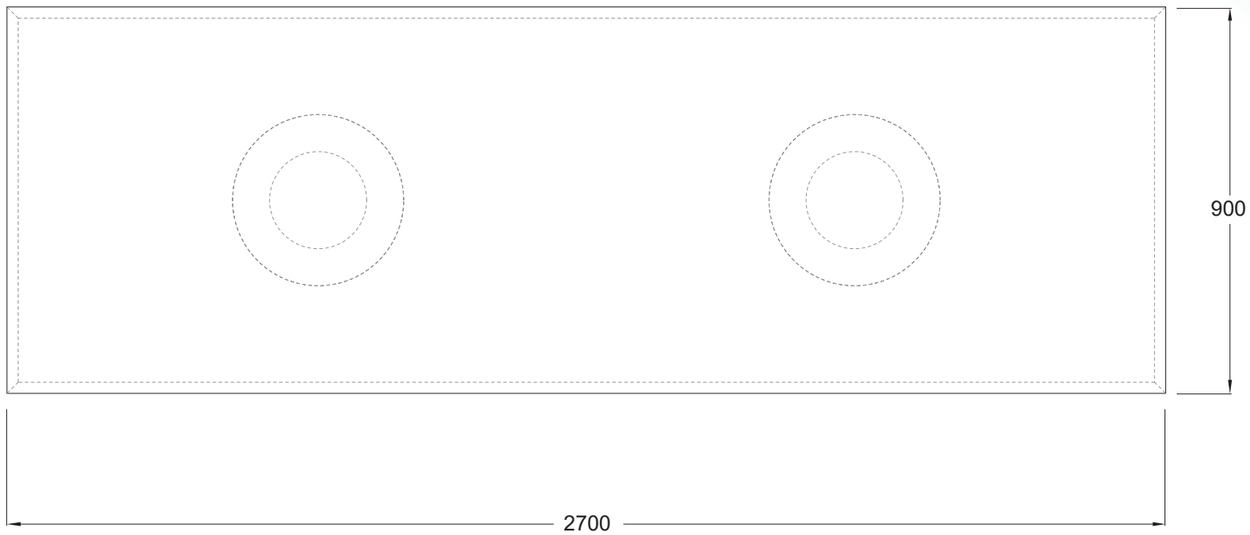

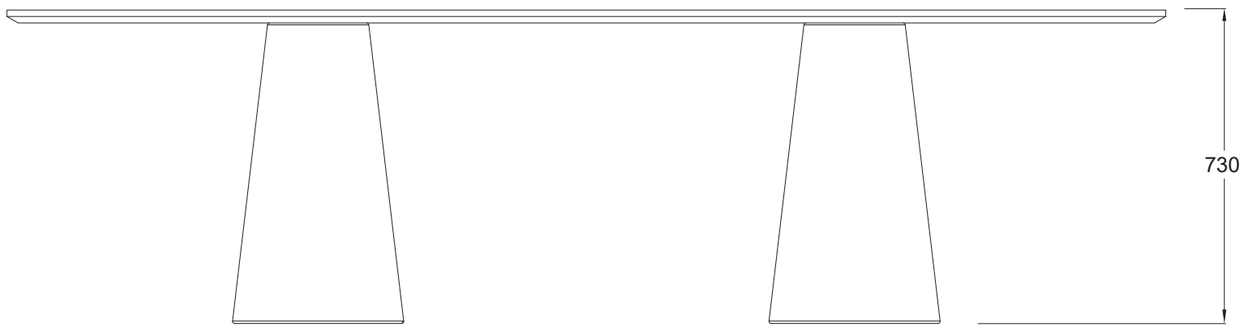

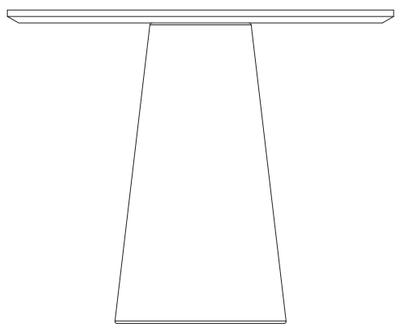

Didier™

LIQUEUR TABLE

LQ_TB.270x90



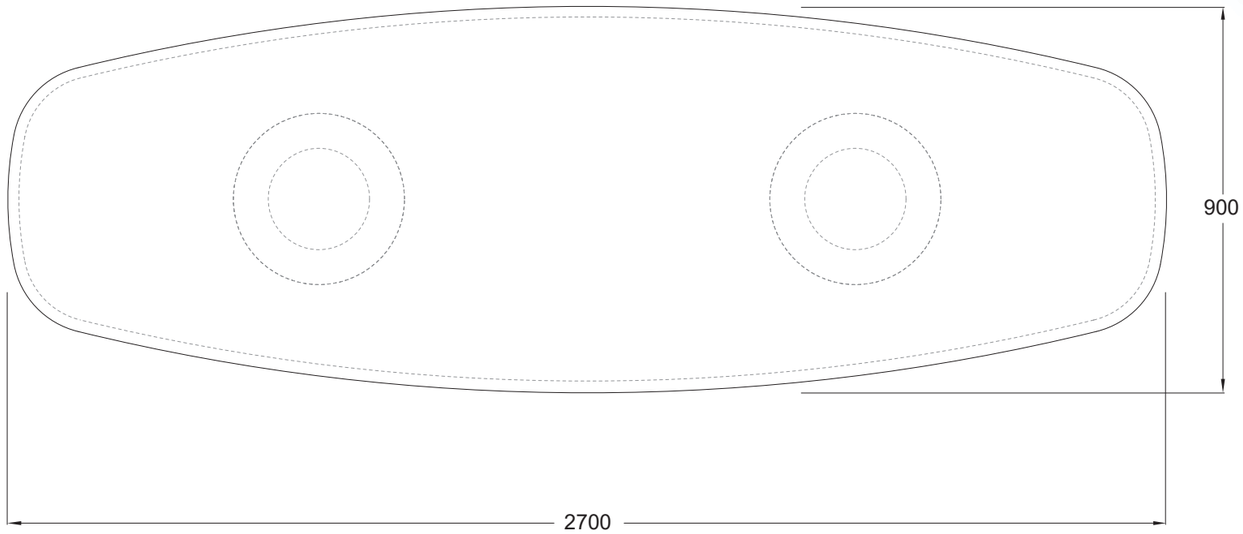

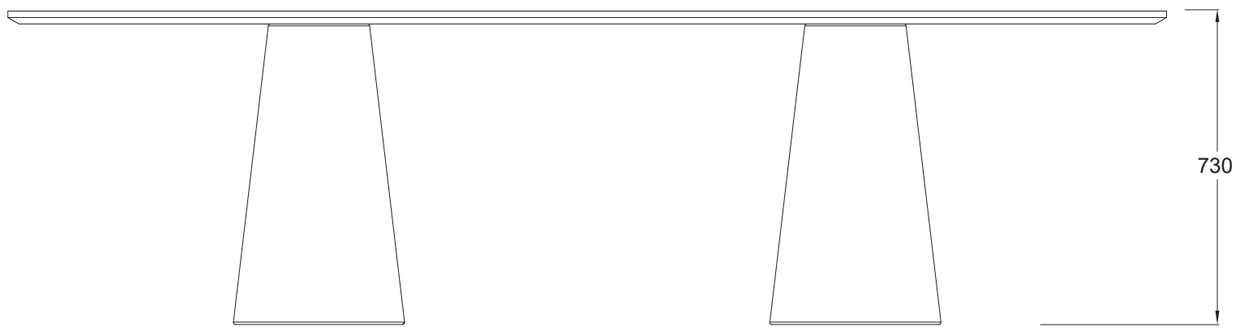

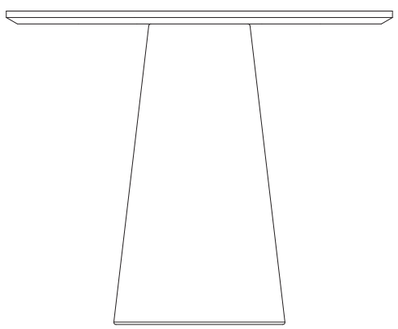

Didier™

LIQUEUR TABLE

LQ_TB.90-DIA

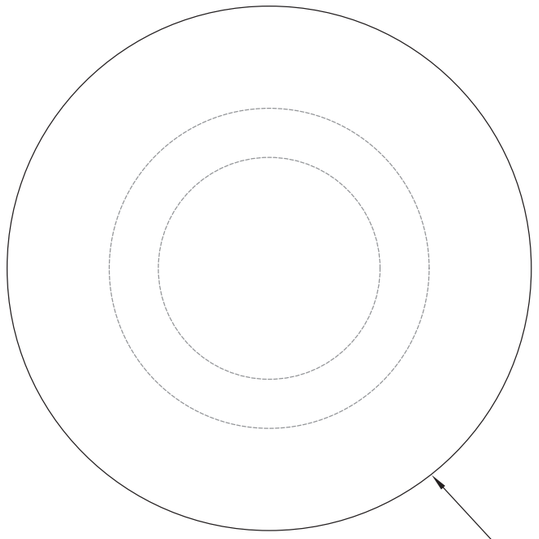



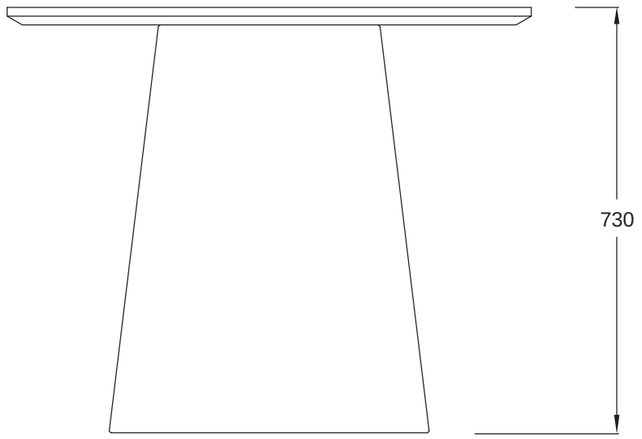

Didier™

LIQUEUR TABLE

LQ_TB.105-DIA

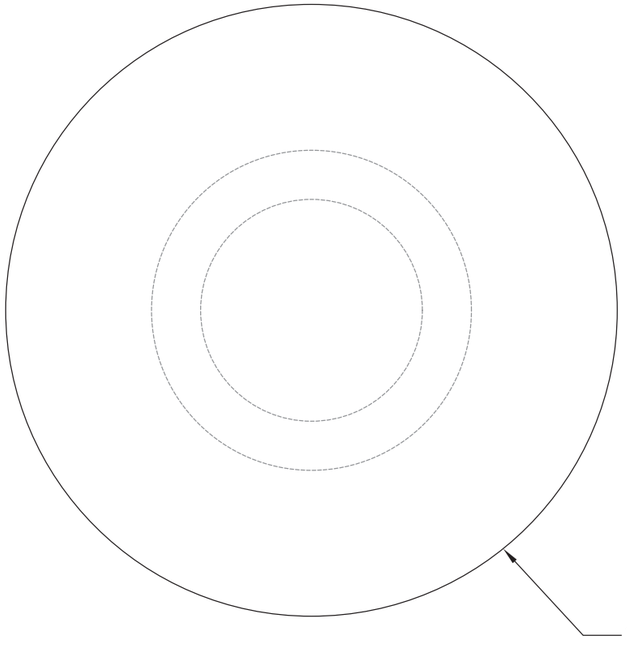



Didier™

LIQUEUR TABLE

LQ_TB.120-DIA

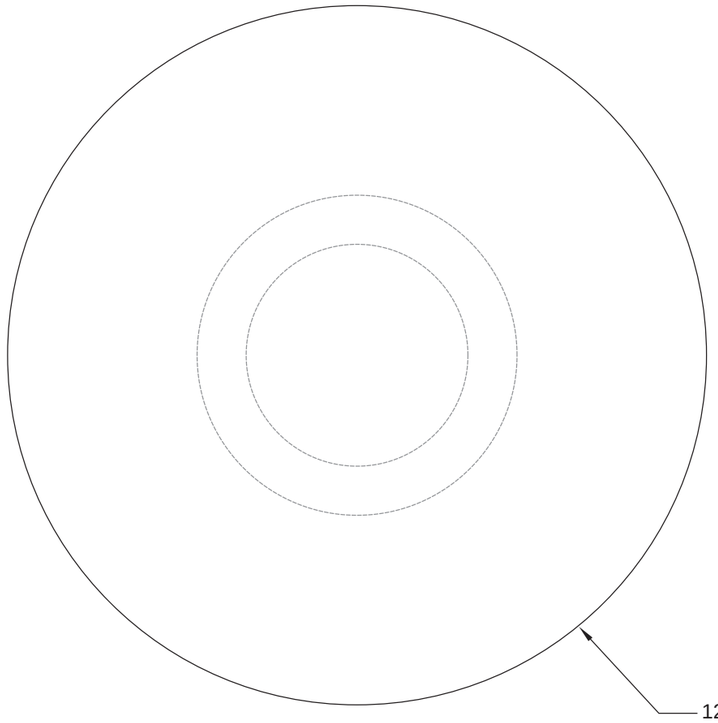

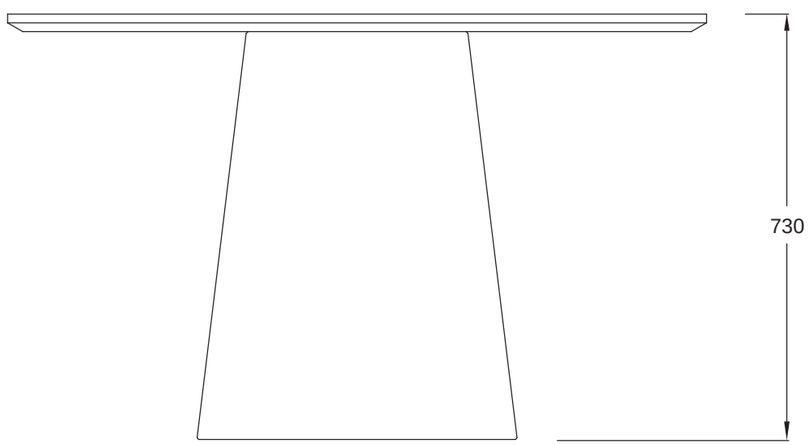



Didier™

LIQUEUR TABLE

LQ_TB.135-DIA

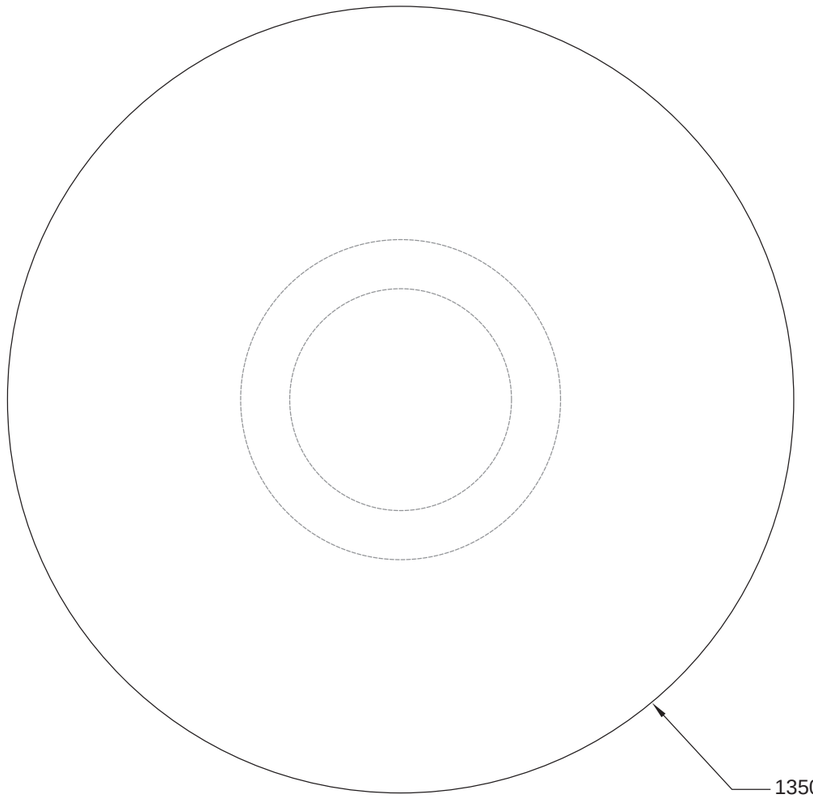

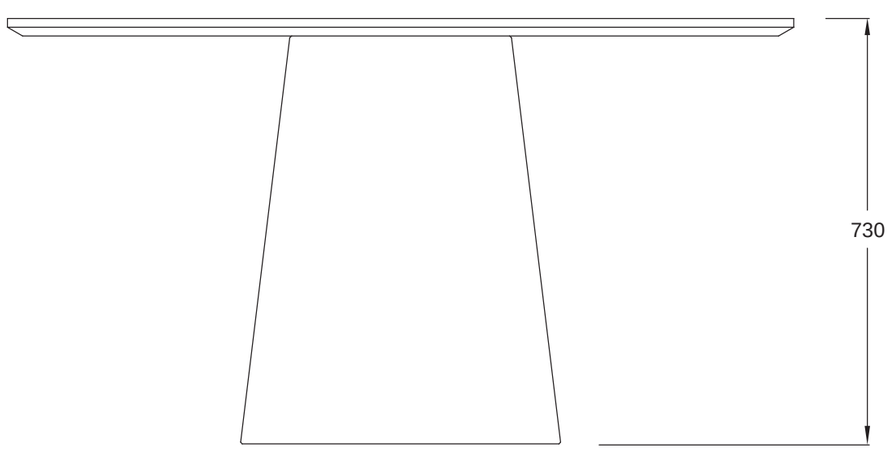



Didier™

LIQUEUR TABLE

LQ_TB.150-DIA

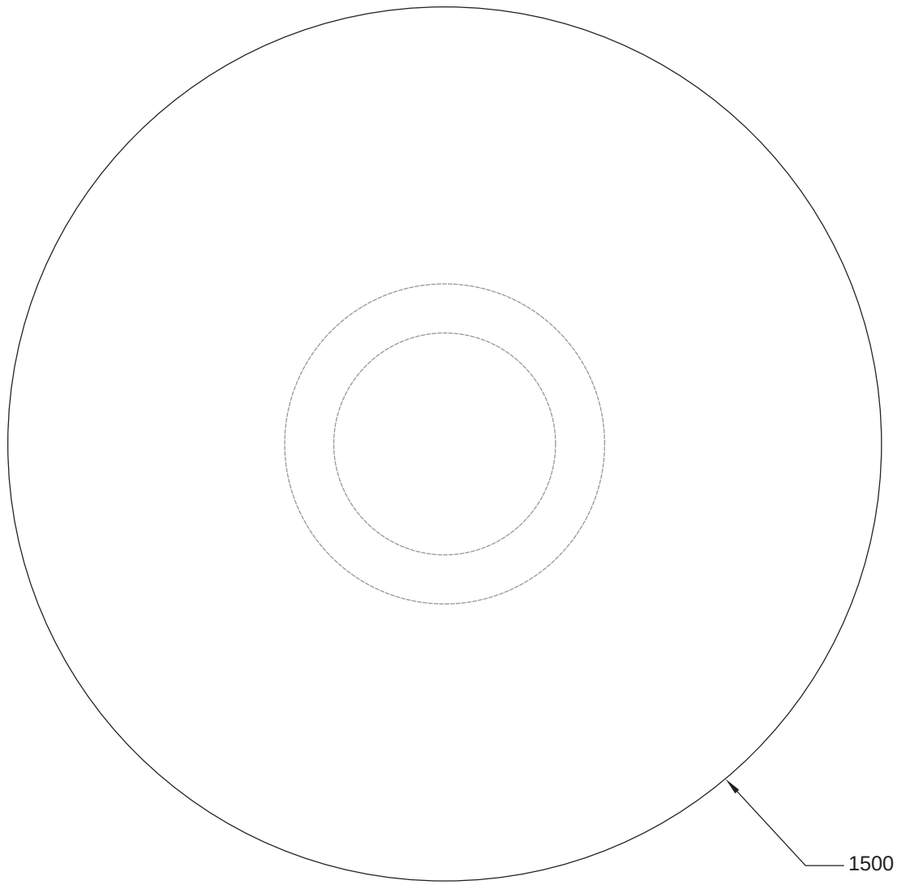



Didier™

LIQUEUR TABLE

LQ_TB.180-DIA

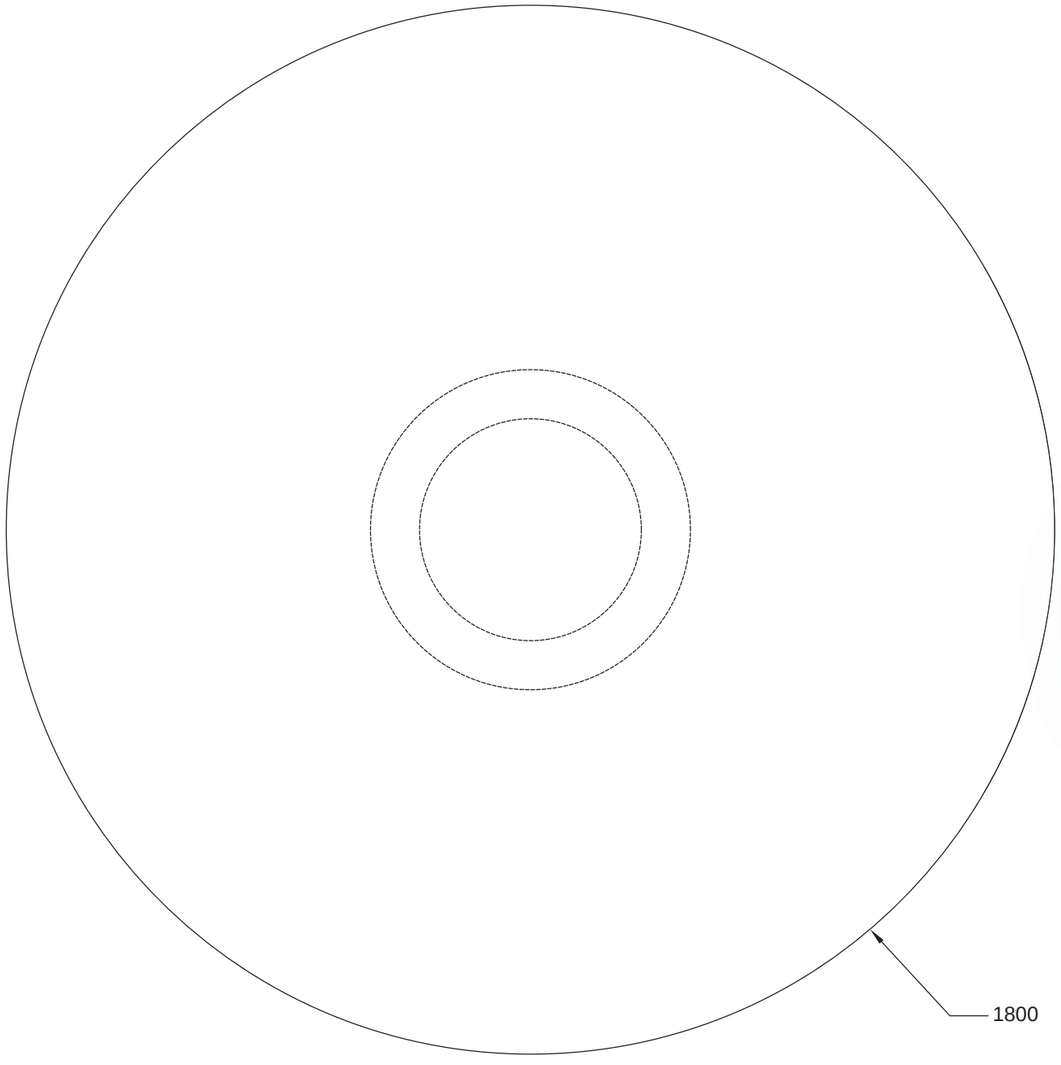

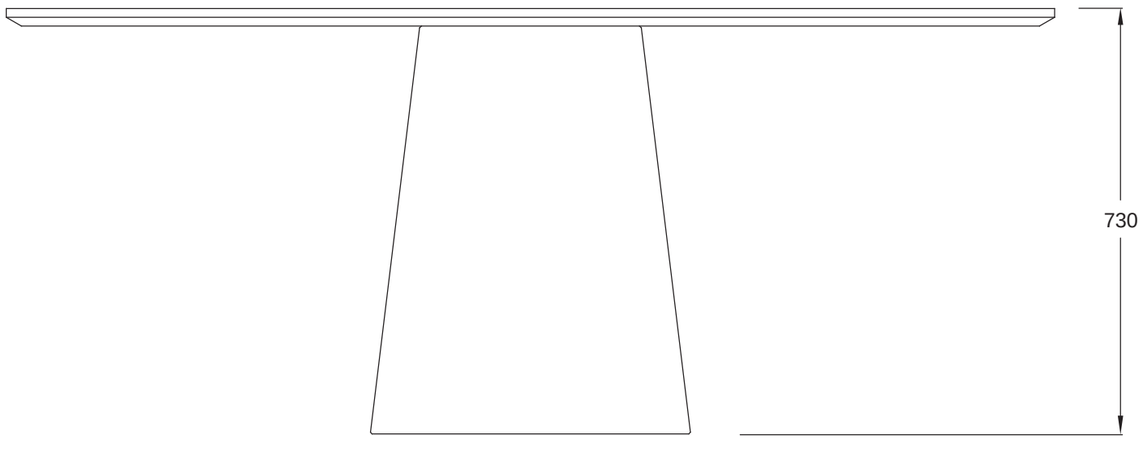



Didier™

LIQUEUR TABLE

LQ_TB.80X80

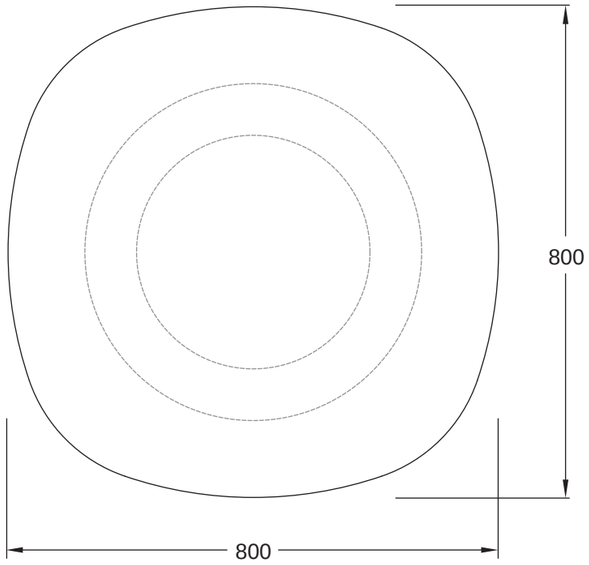

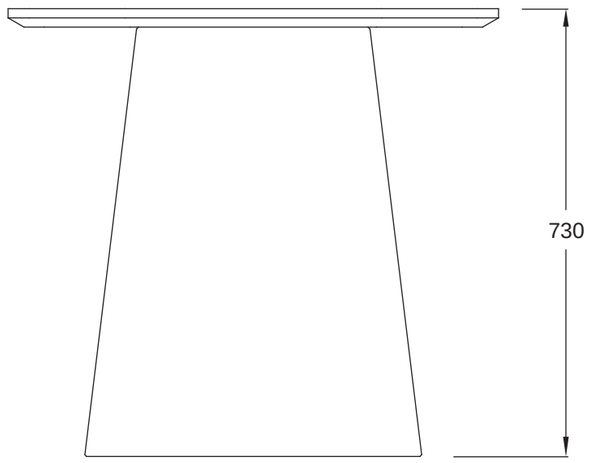



Didier®

LIQUEUR TABLE

LQ_TB.115X115

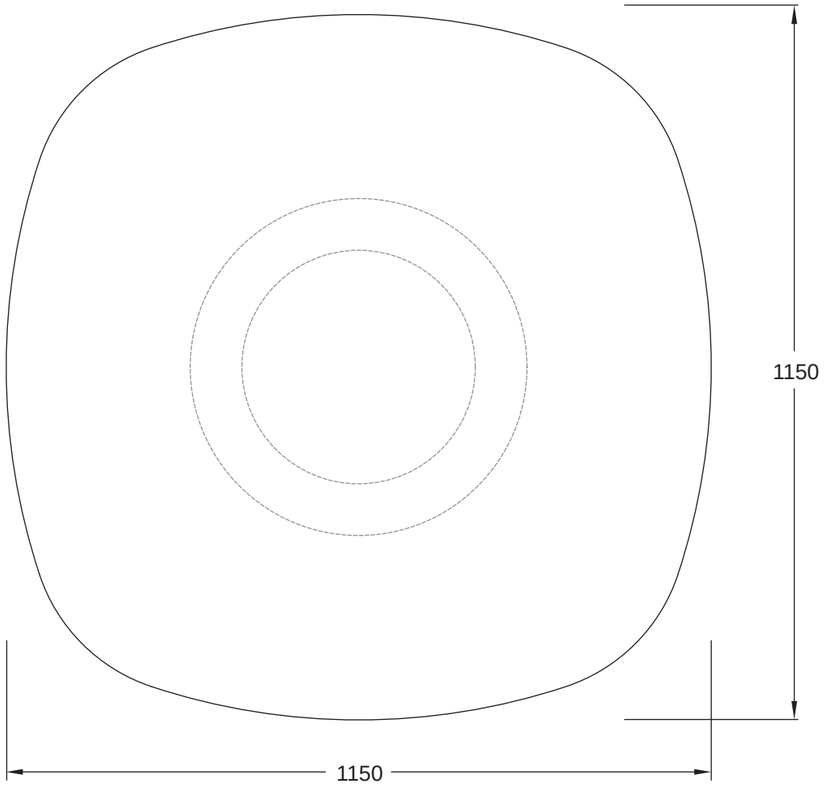

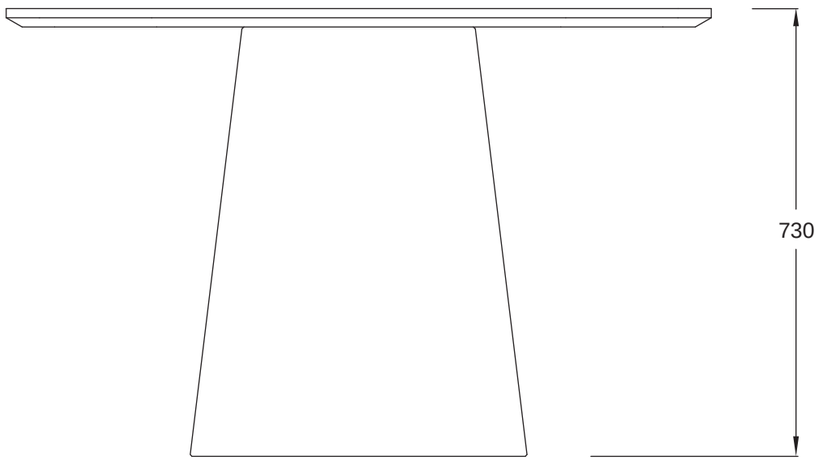



Didier™

LIQUEUR TABLE

LQ_TB.150X150

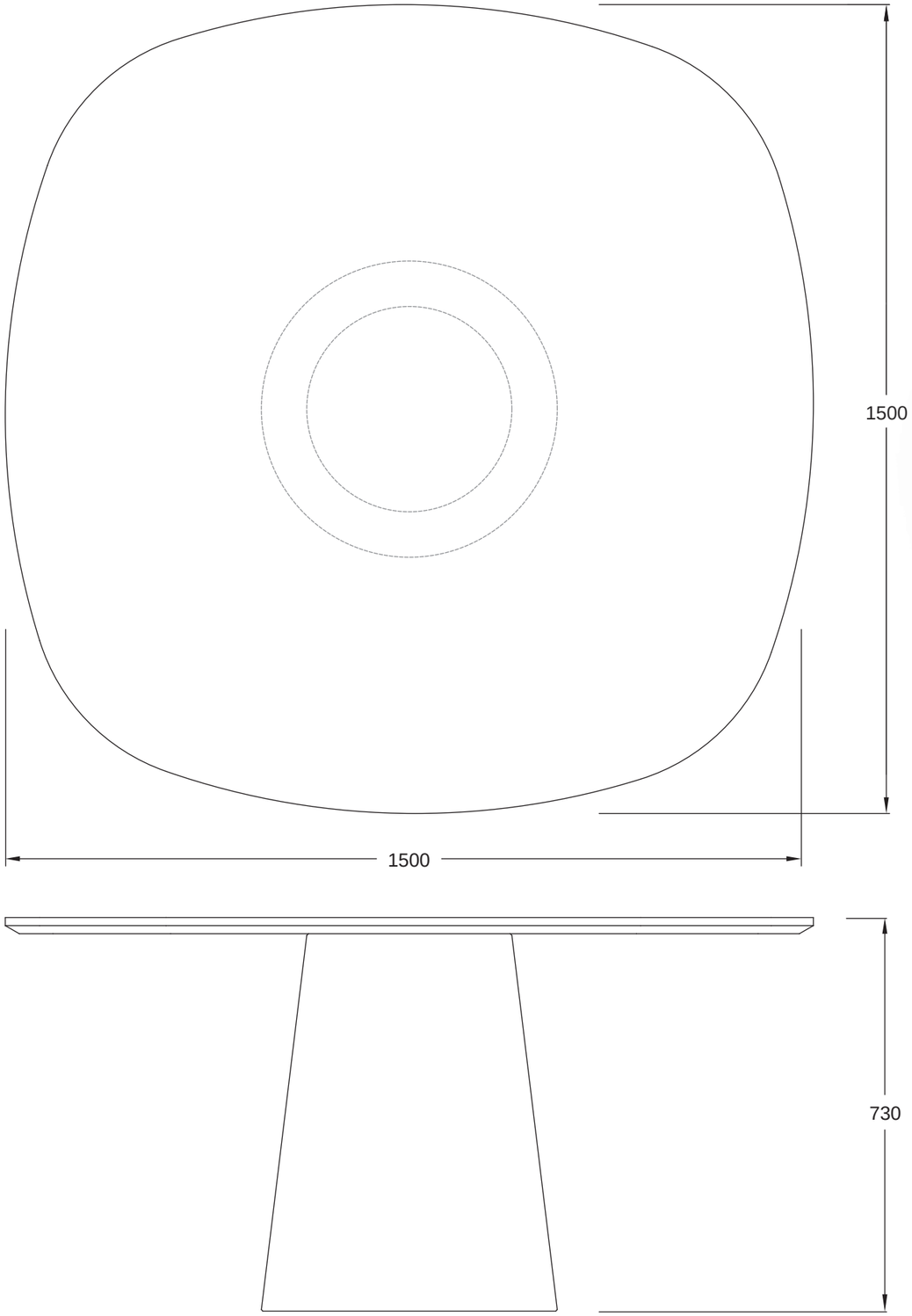



Didier™

LIQUEUR TABLE

LQ_TB.150x120



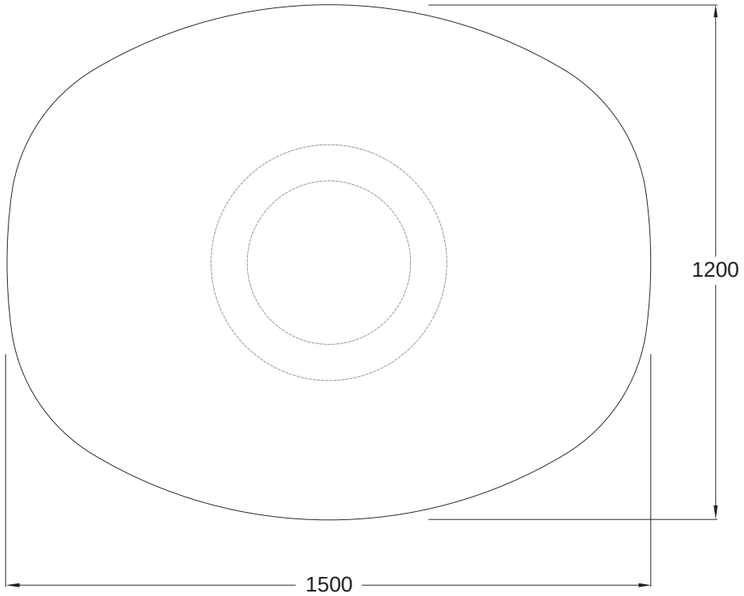

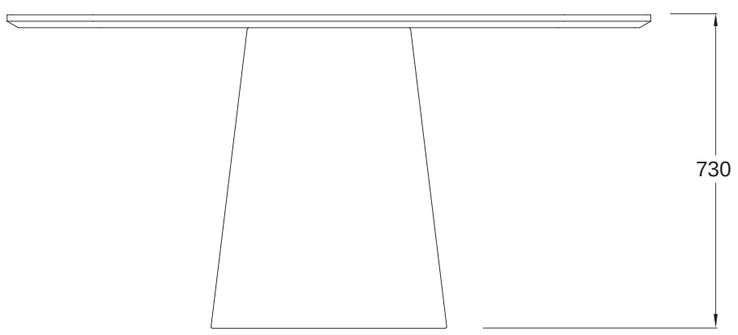

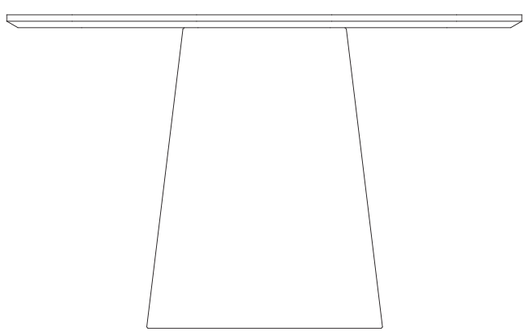

Didier™

LIQUEUR TABLE

LQ_TB.180x120



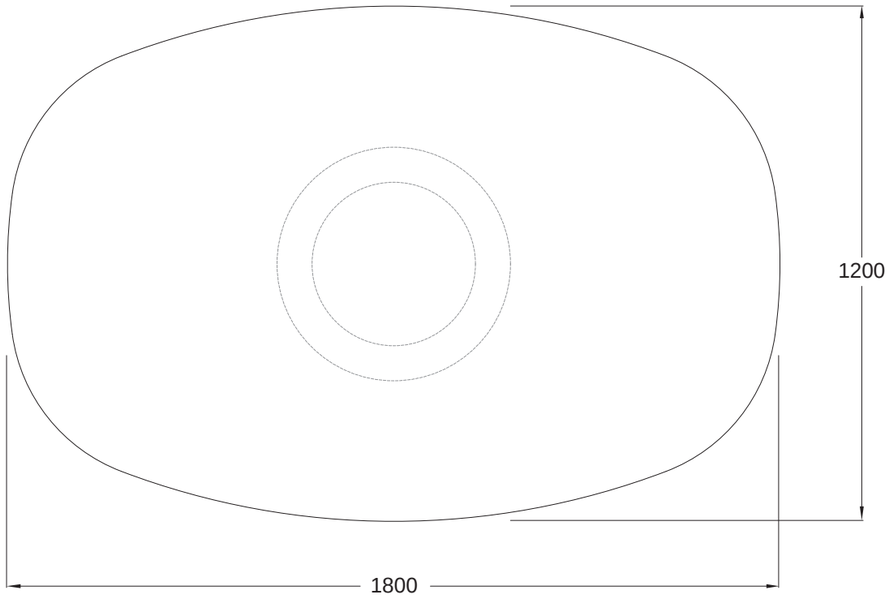

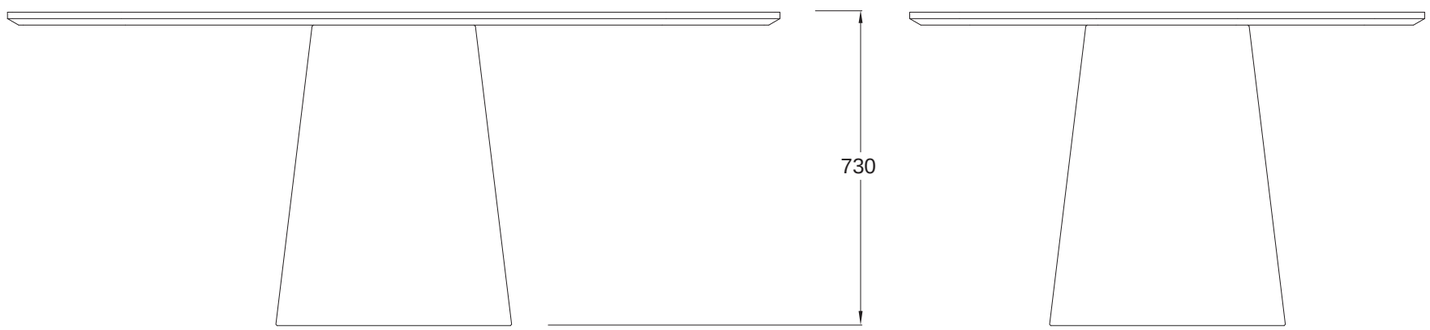

Didier™

LIQUEUR TABLE

LQ_TB.210x120



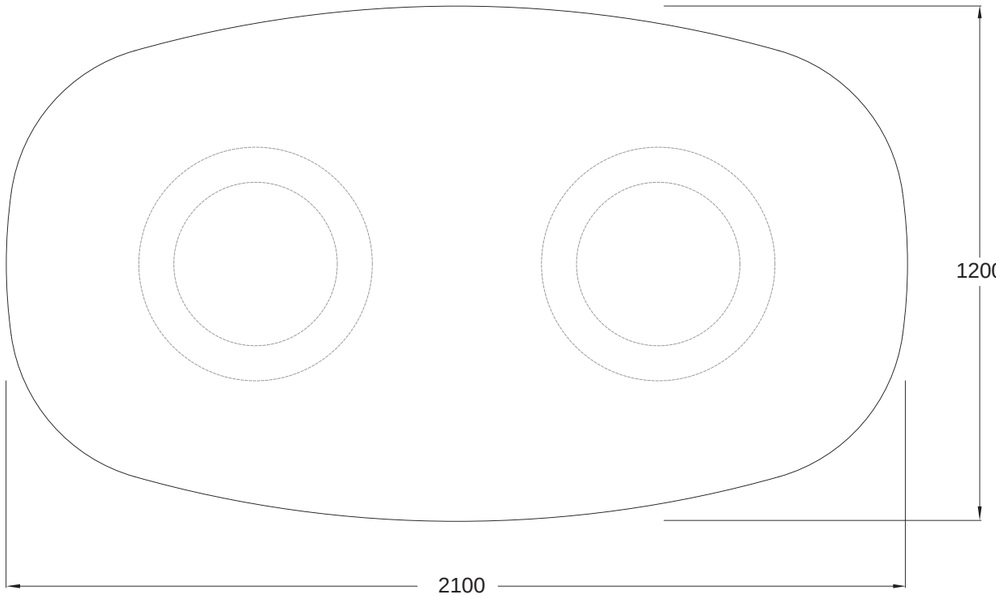

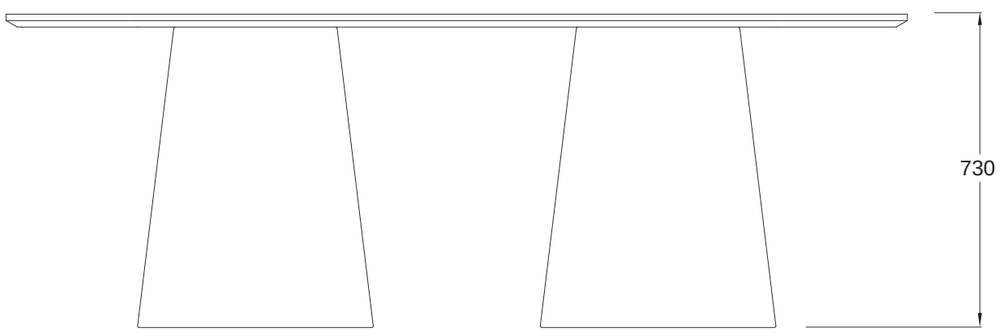

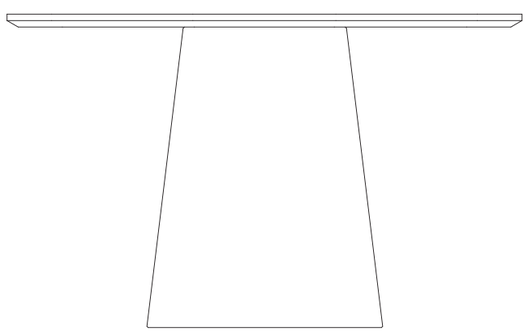

Didier™

LIQUEUR TABLE

LQ_TB.240x120



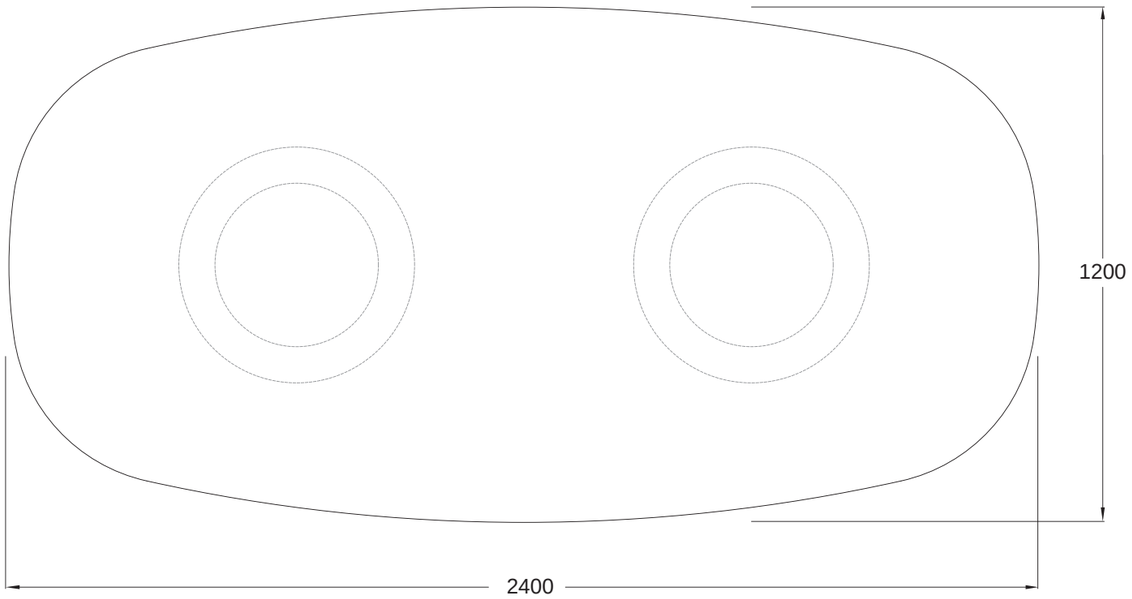

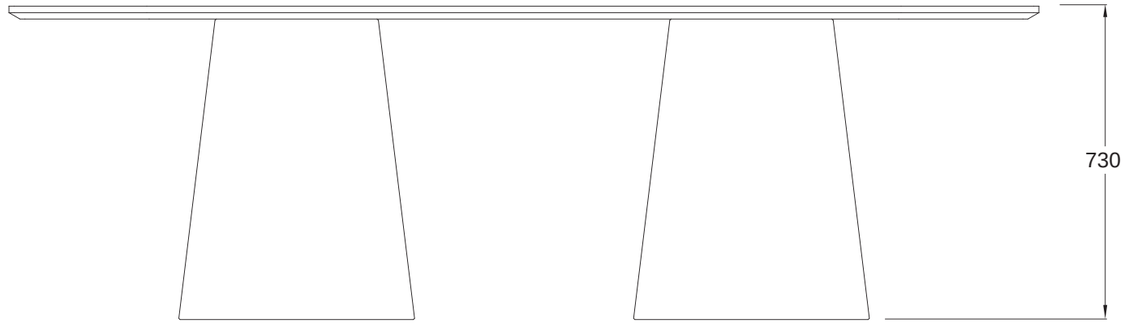

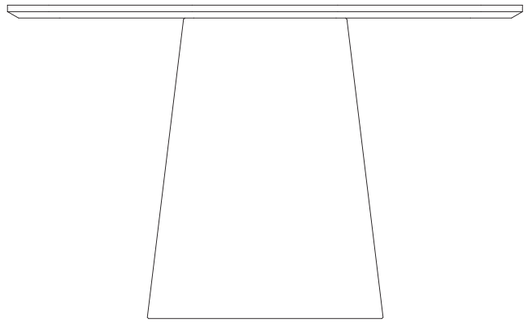

Didier®

LIQUEUR TABLE

LQ_TB.270x120



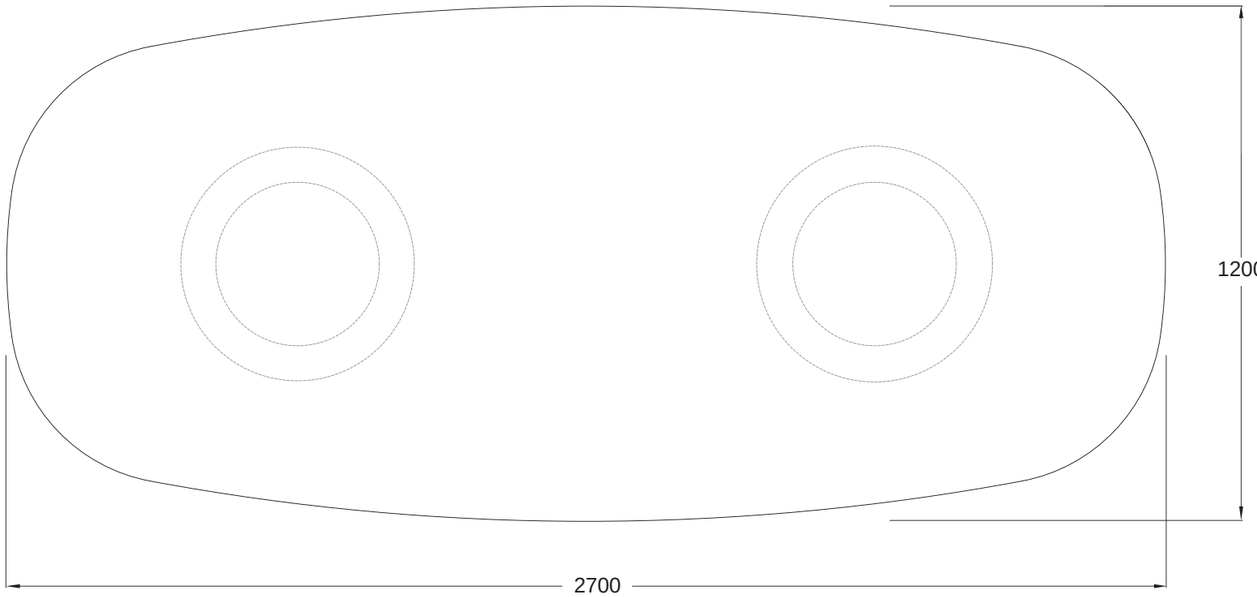

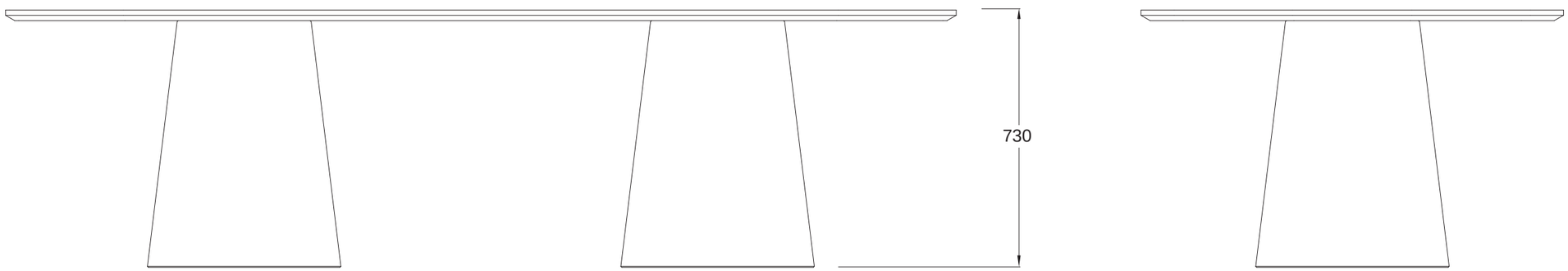

Didier™

LIQUEUR TABLE

LQ_TB.300x120



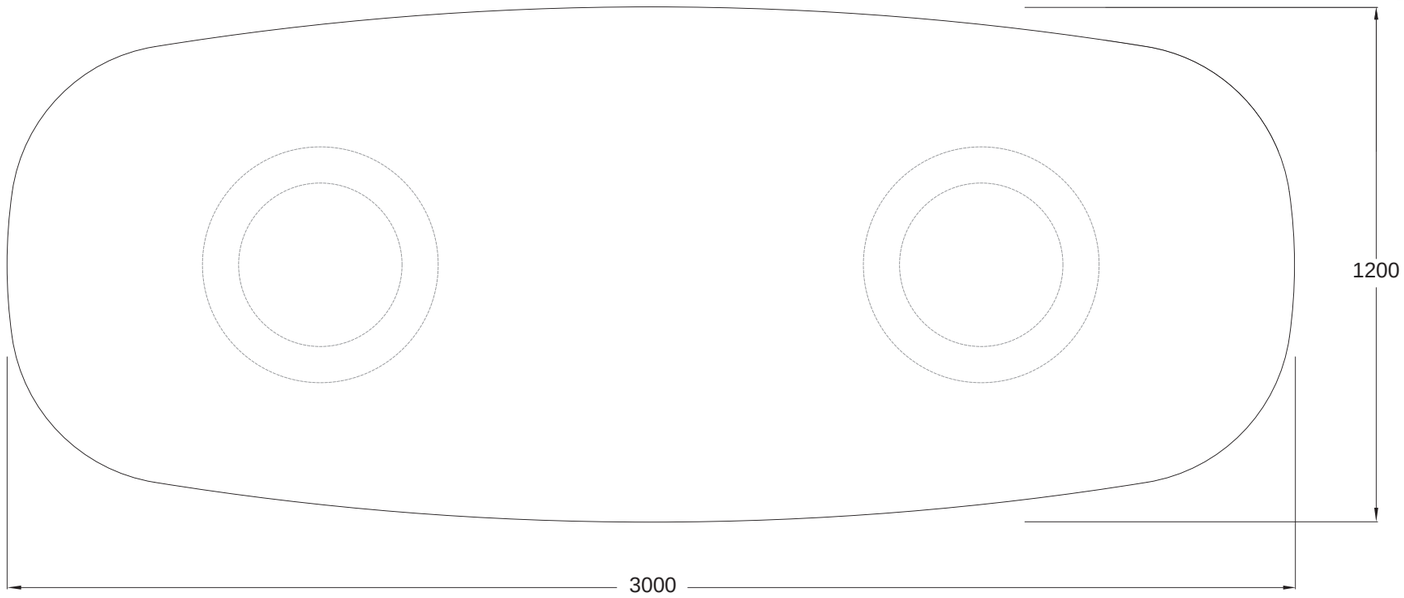

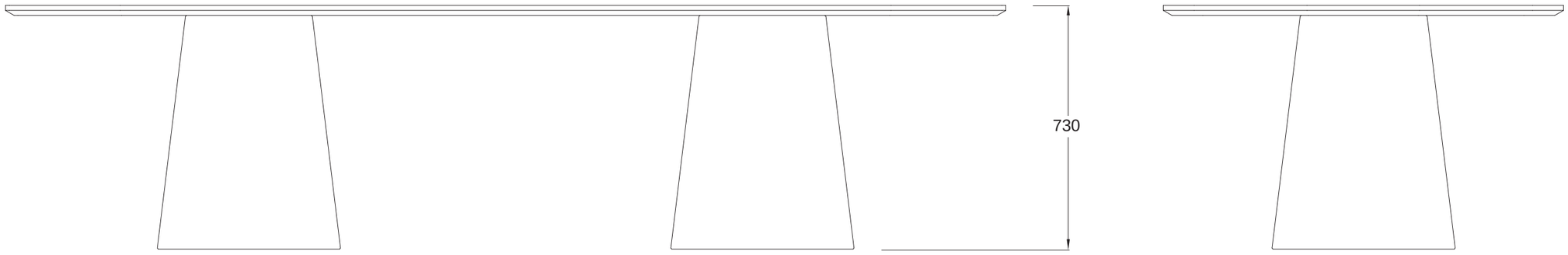

Didier™

LIQUEUR TABLE

LQ_TB.330x120



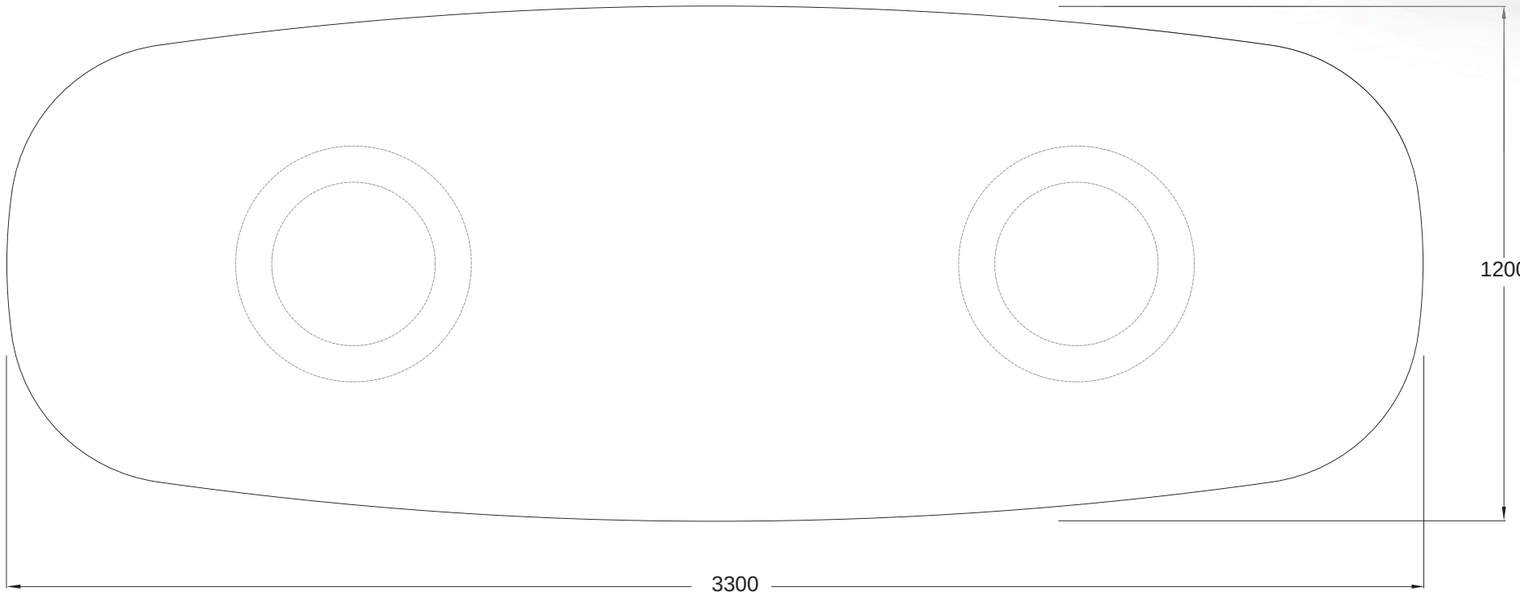

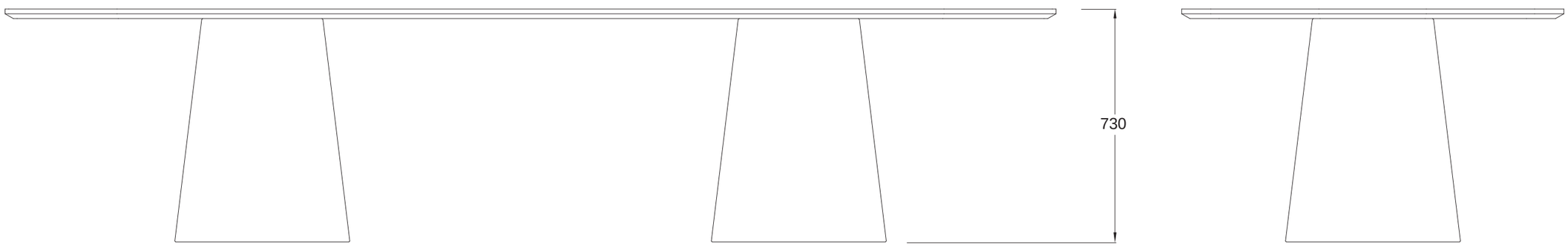

Didier™

LIQUEUR TABLE

LQ_TB.360x120



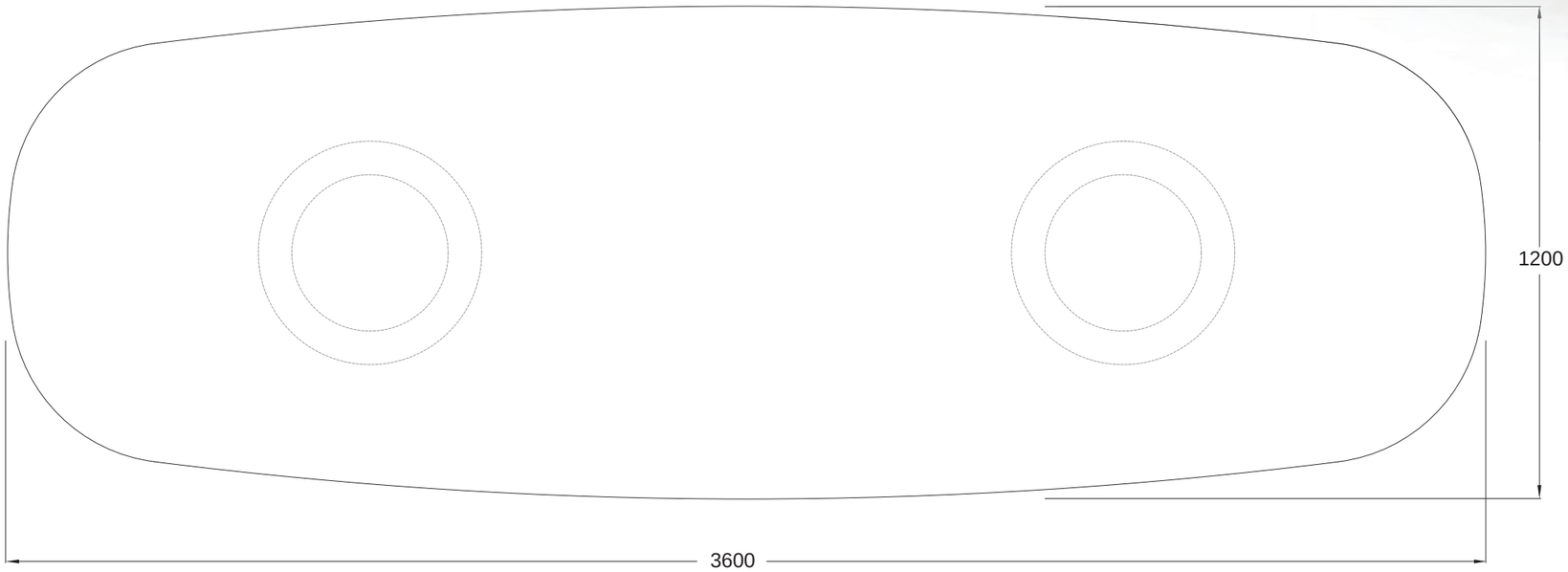

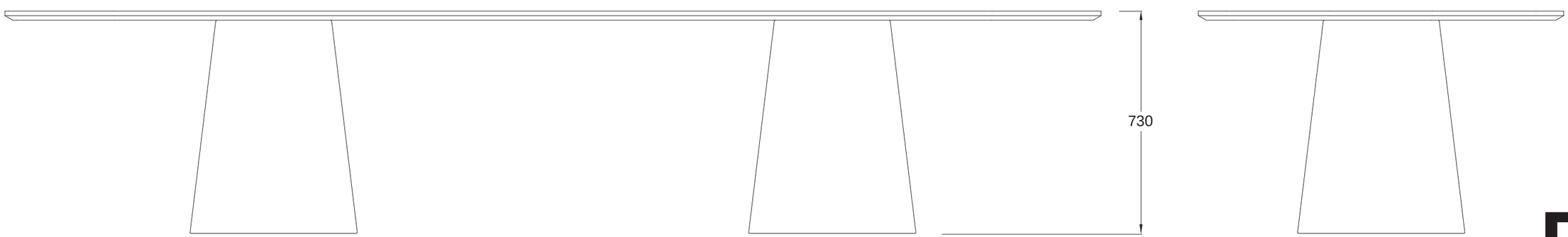

Didier™

LIQUEUR TABLE [RECTANGLE]

LQ_TB.210x120[RECTANGLE]



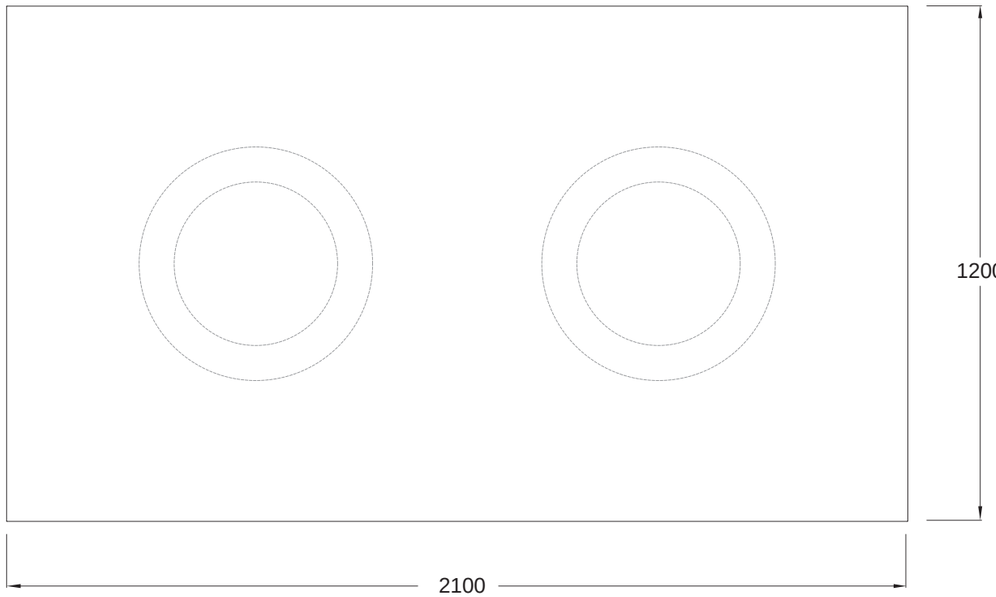

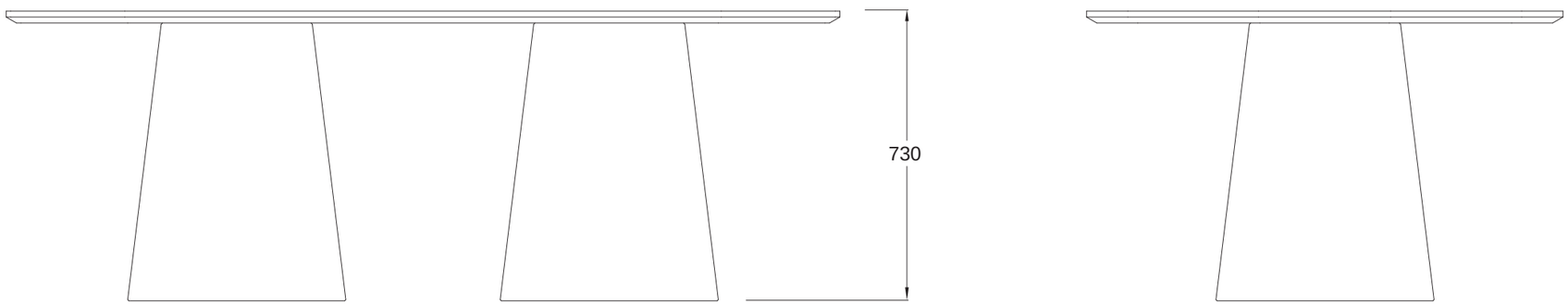

Didier™

LIQUEUR TABLE [RECTANGLE]

LQ_TB.240x120[RECTANGLE]



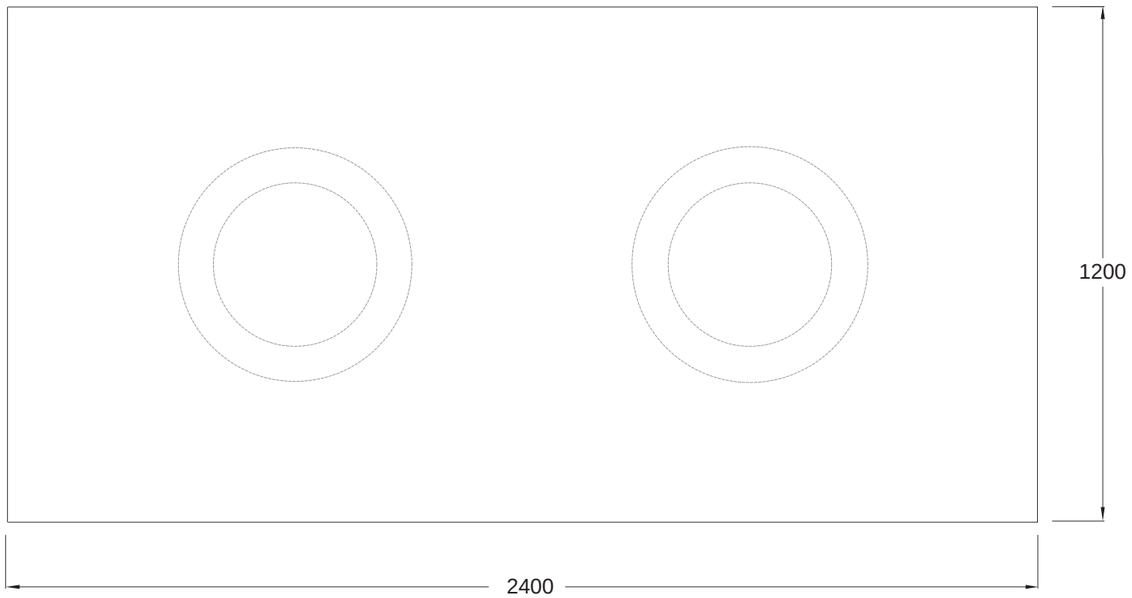

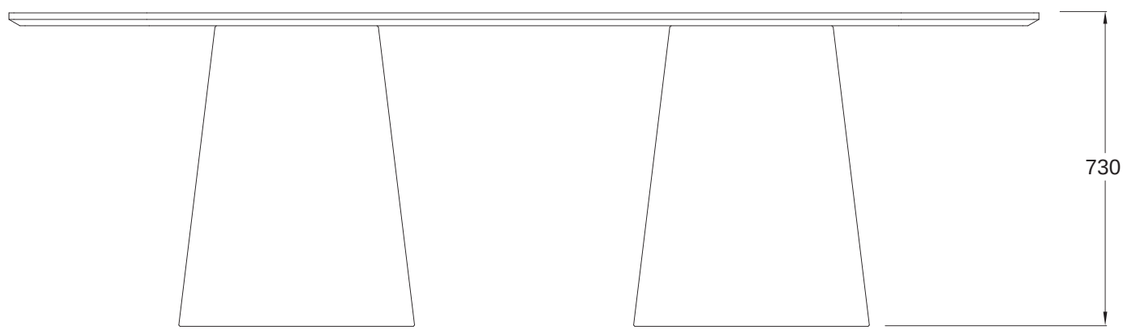

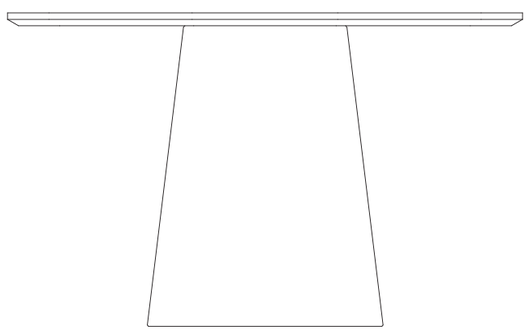

Didier™

LIQUEUR TABLE [RECTANGLE]

LQ_TB.270x120[RECTANGLE]



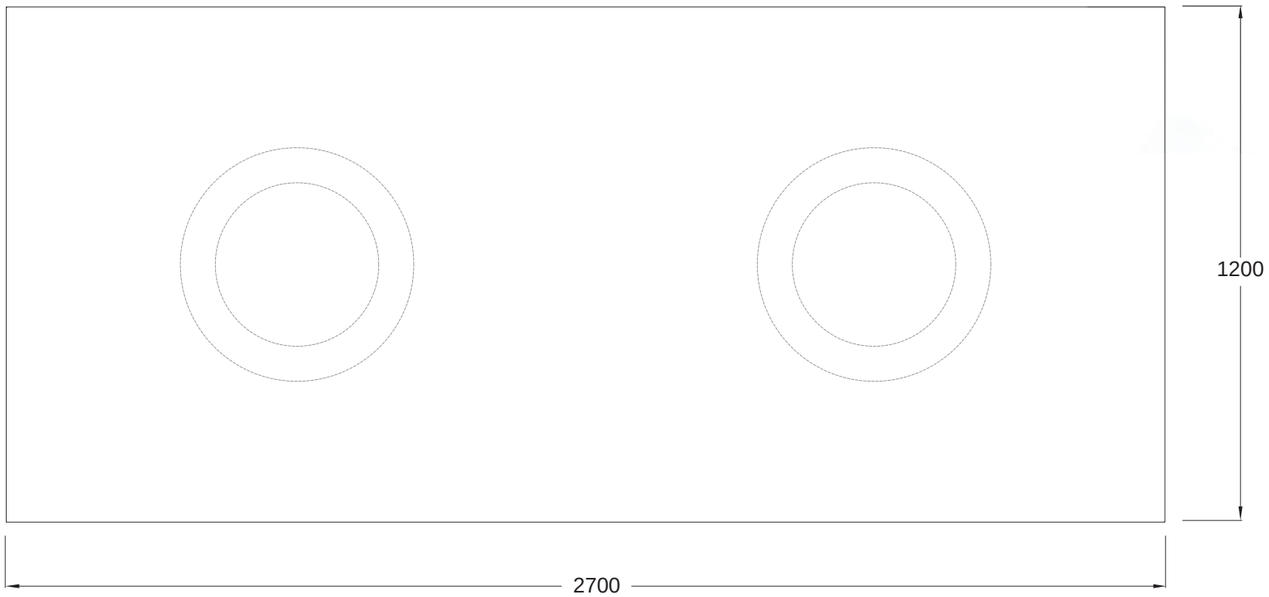

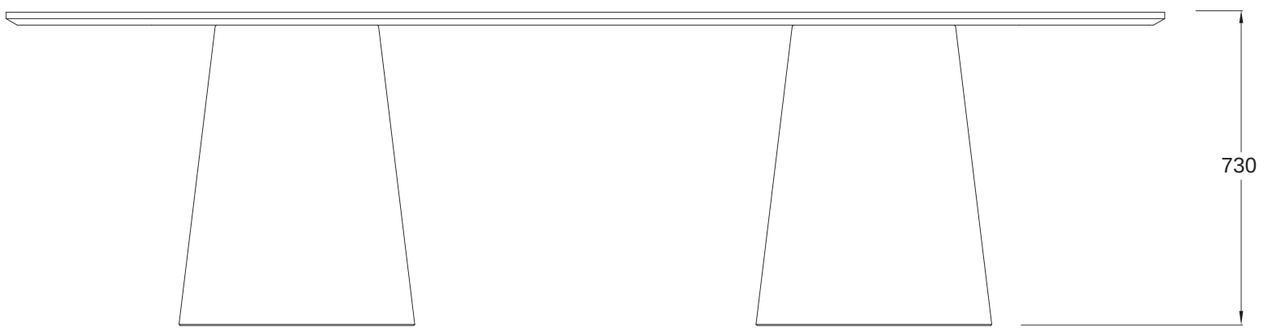

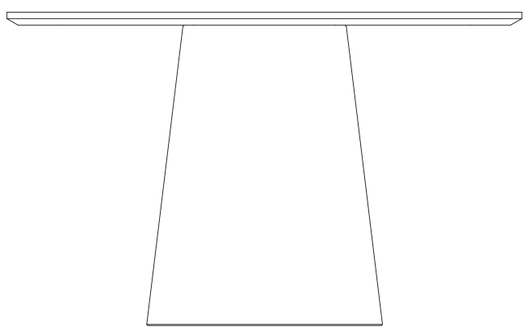

Didier™

LIQUEUR TABLE [RECTANGLE]

LQ_TB.300x120[RECTANGLE]



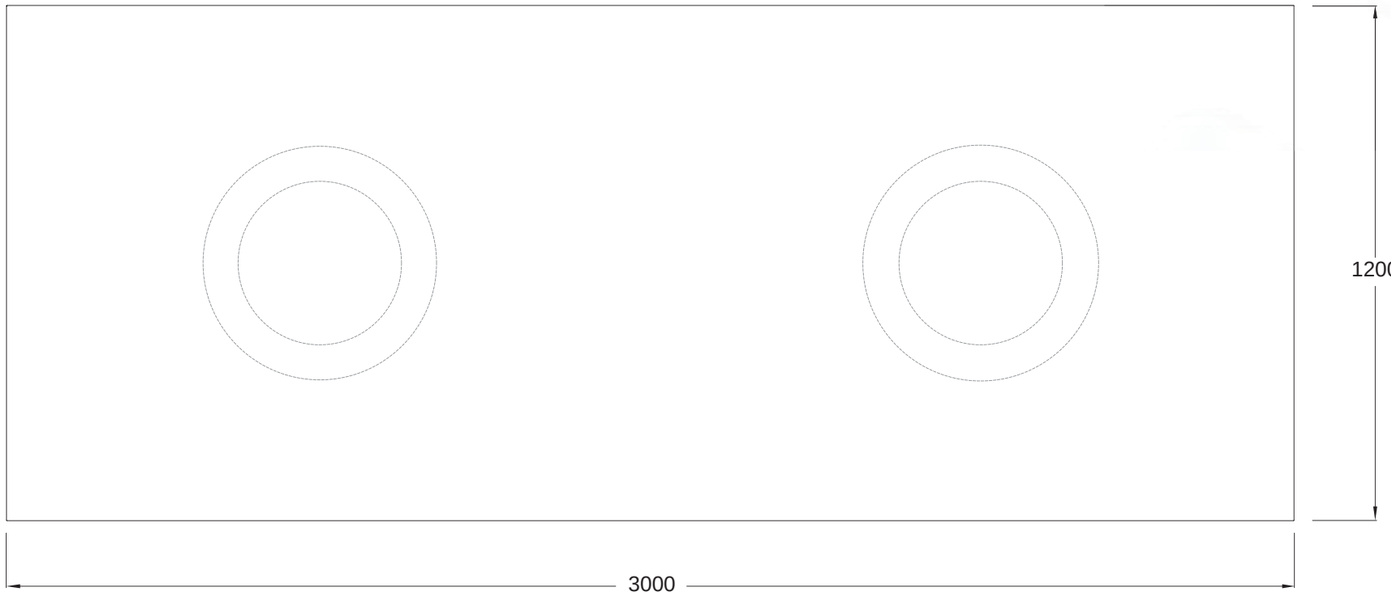

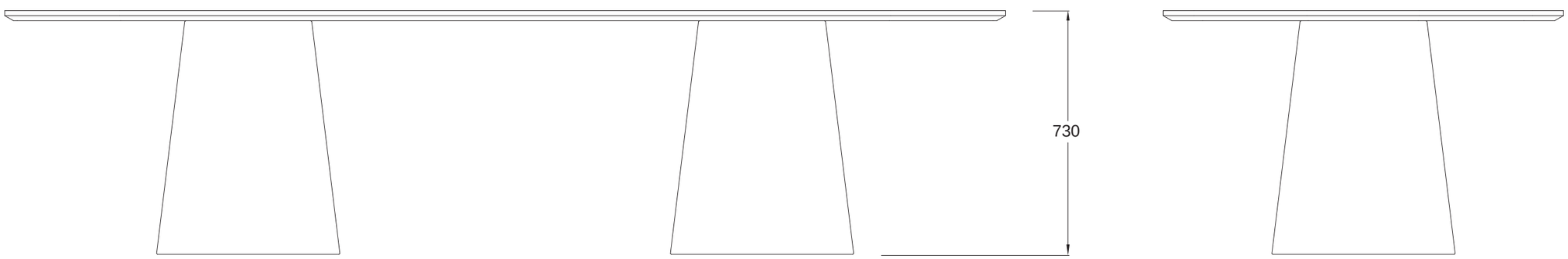

Didier™

LIQUEUR TABLE [RECTANGLE]

LQ_TB.330x120[RECTANGLE]



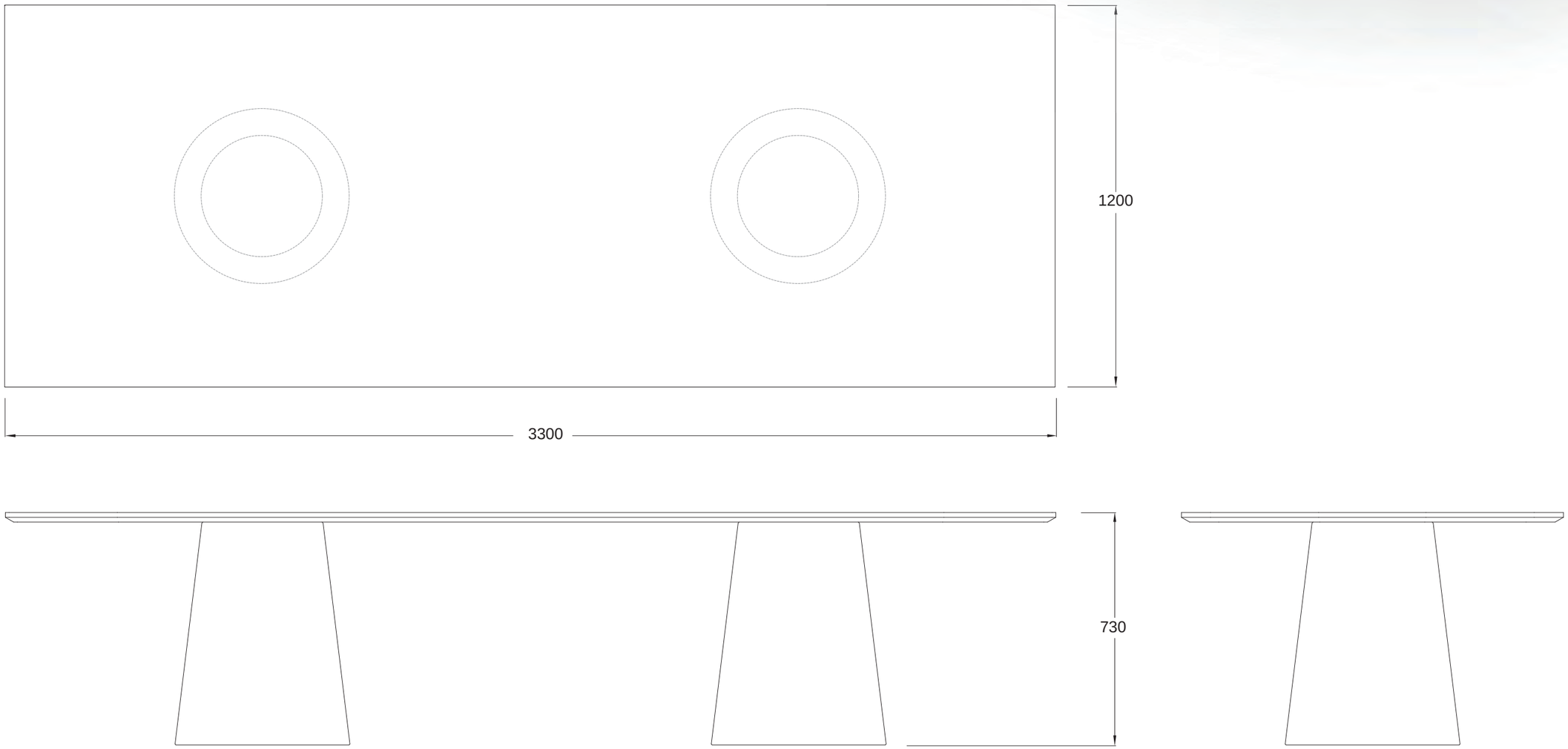

Didier™

LIQUEUR TABLE [RECTANGLE]

LQ_TB.360x120[RECTANGLE]



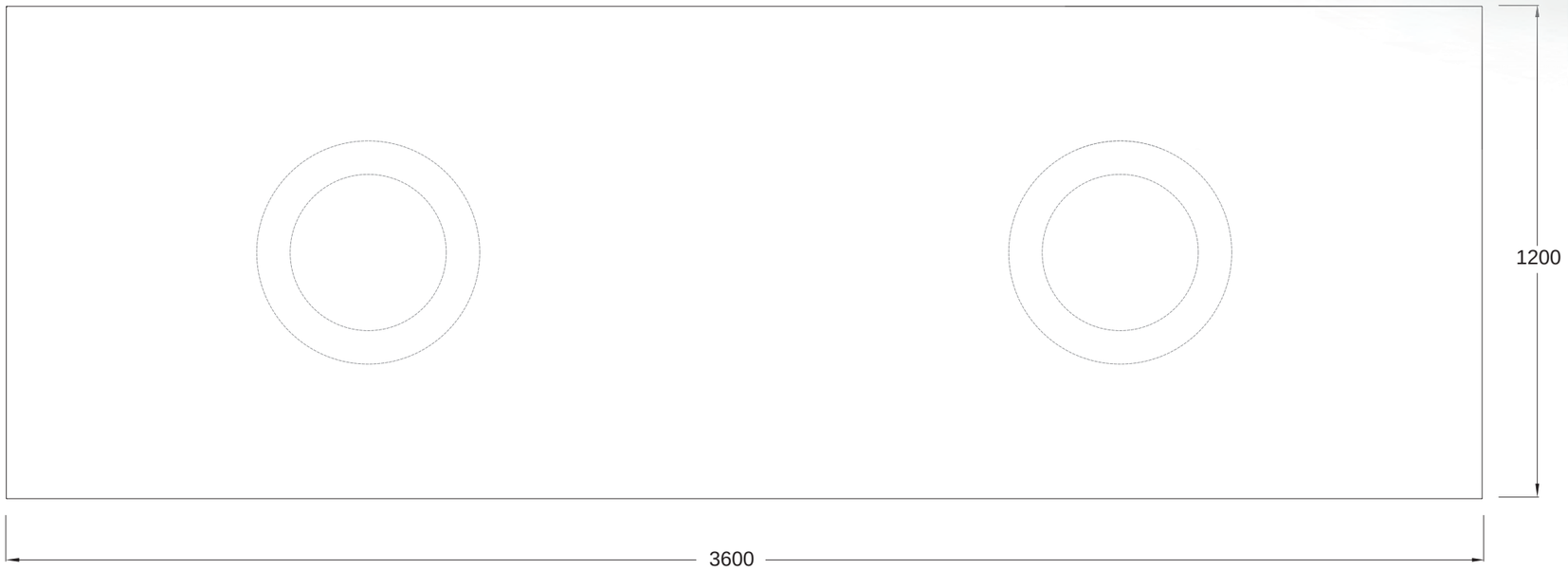

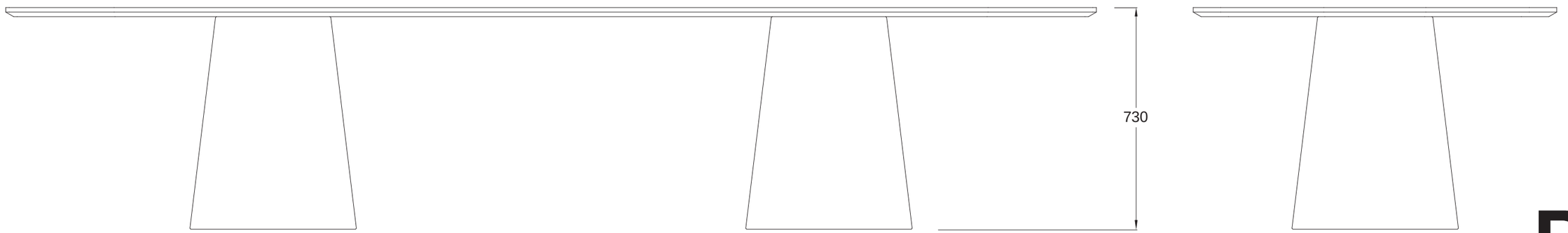

Didier™

LIQUEUR TABLE

LQ_TB.270x135



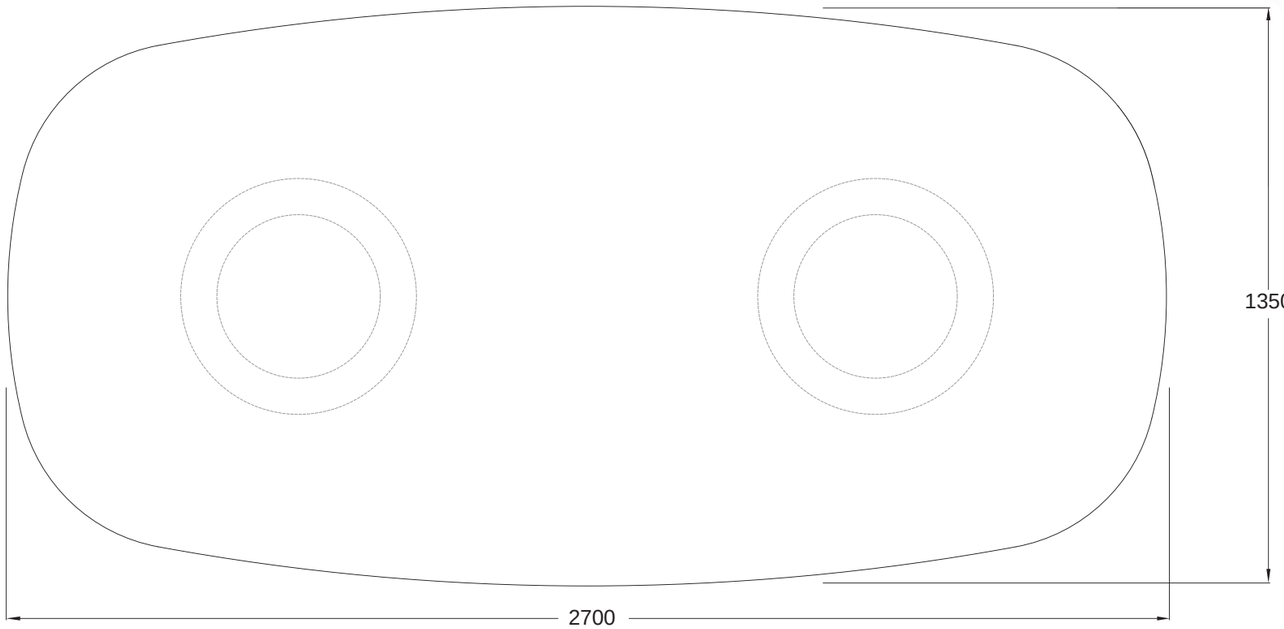

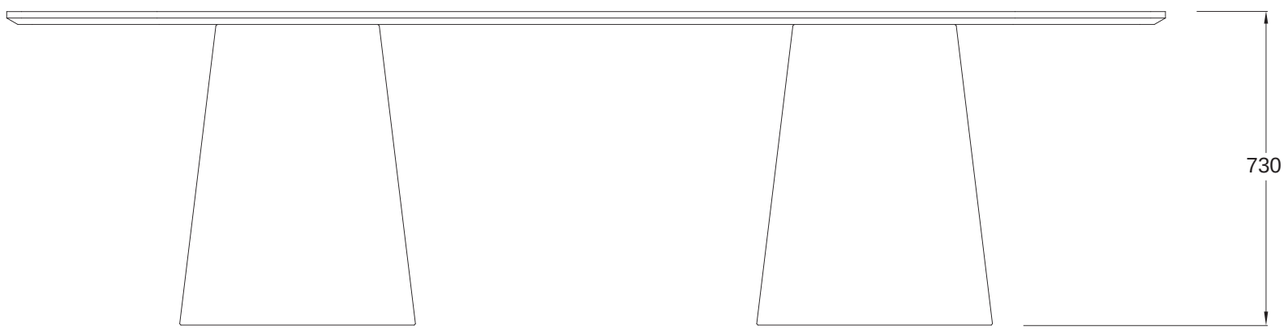

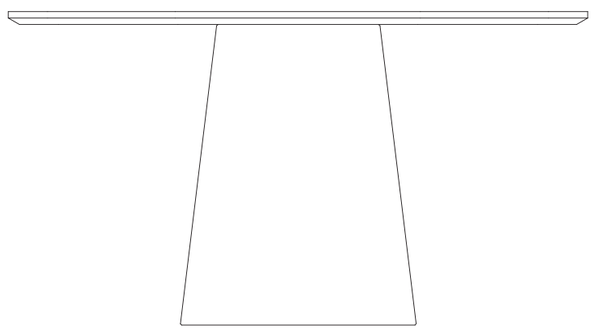

Didier™

LIQUEUR TABLE

LQ_TB.300x135



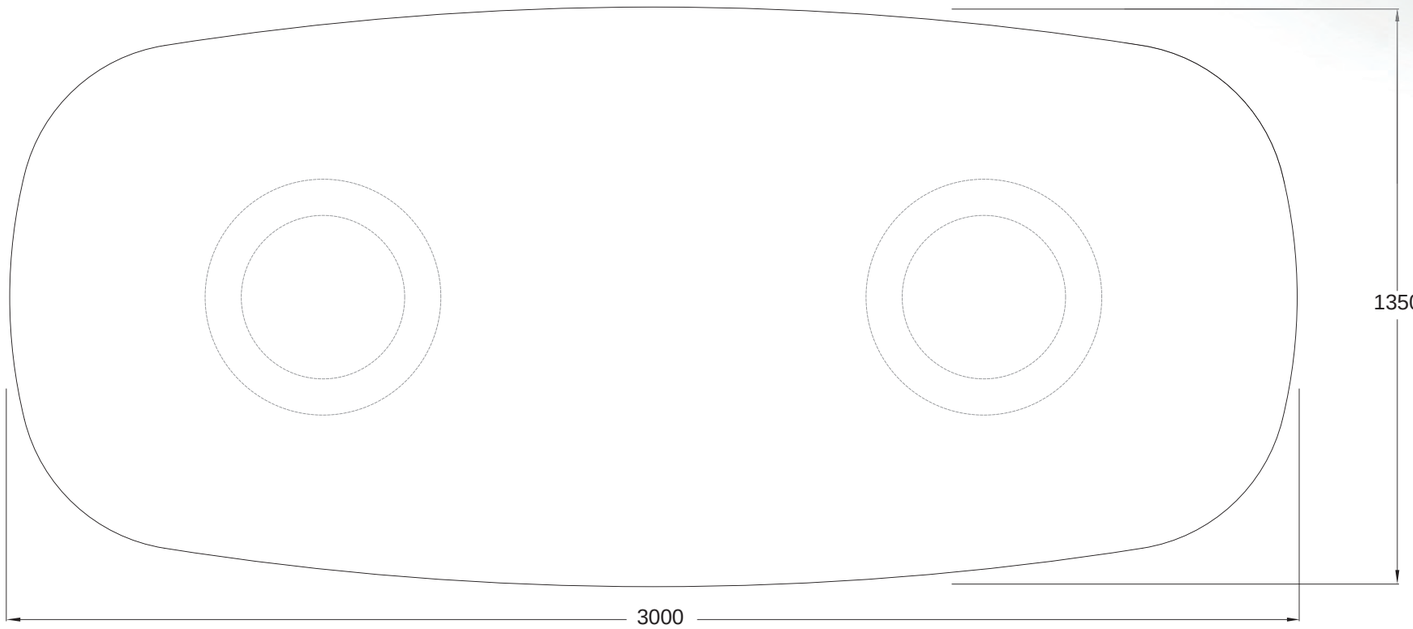

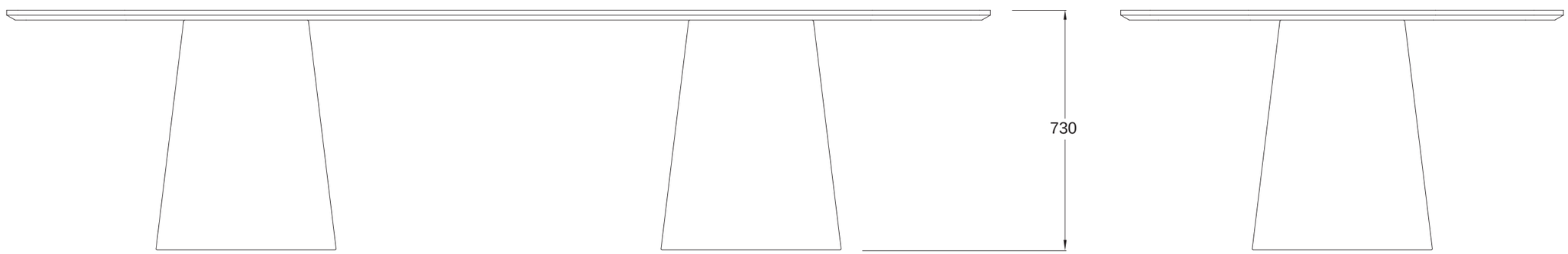

Didier™

LIQUEUR TABLE

LQ_TB.330x135



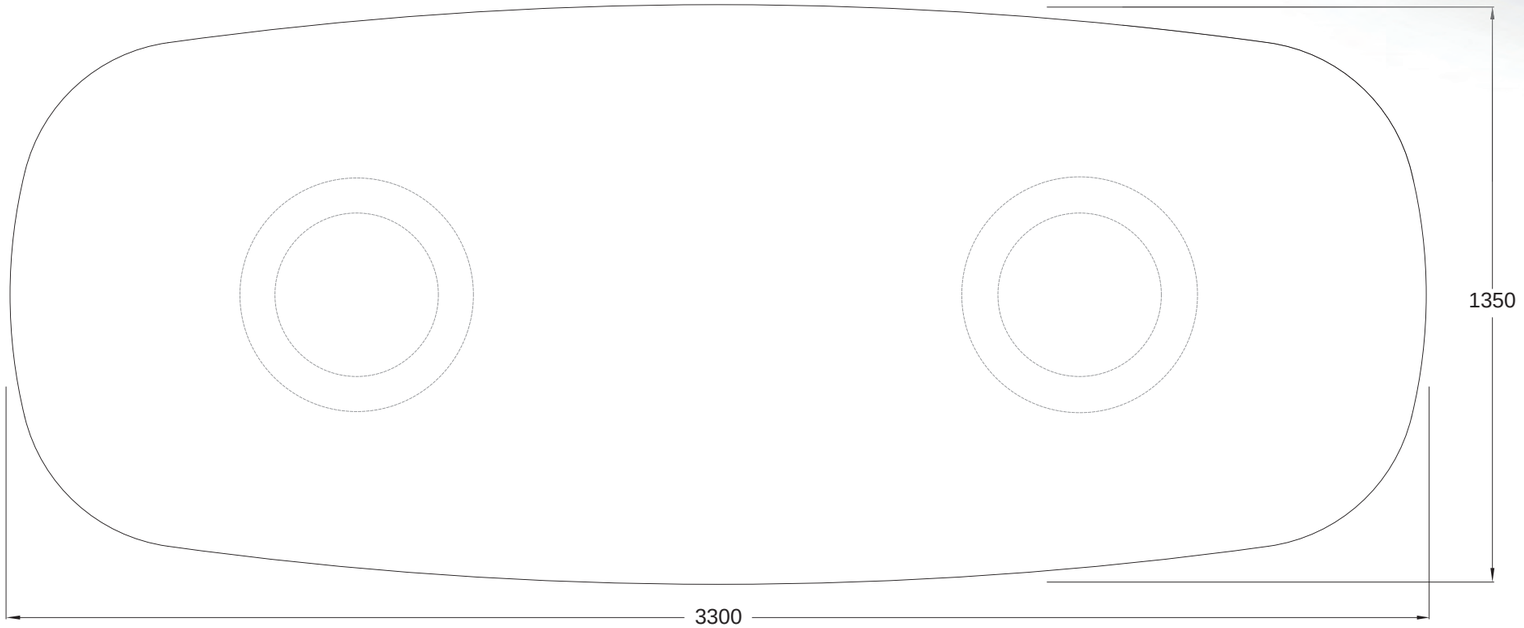

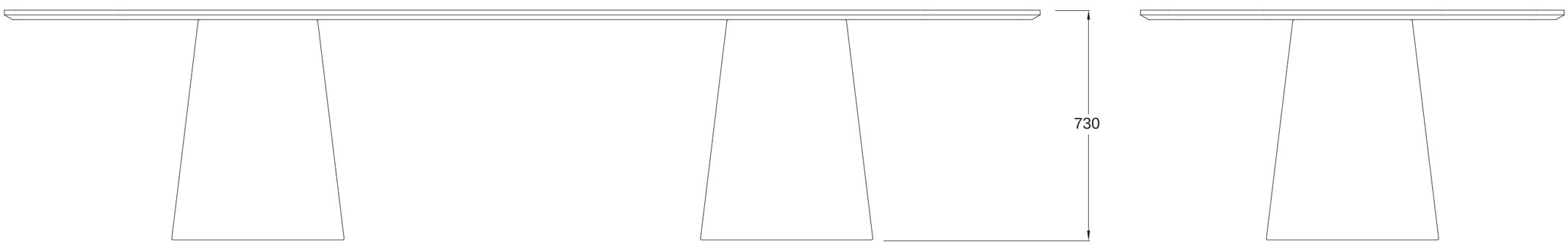

Didier™

LIQUEUR TABLE

LQ_TB.360x135



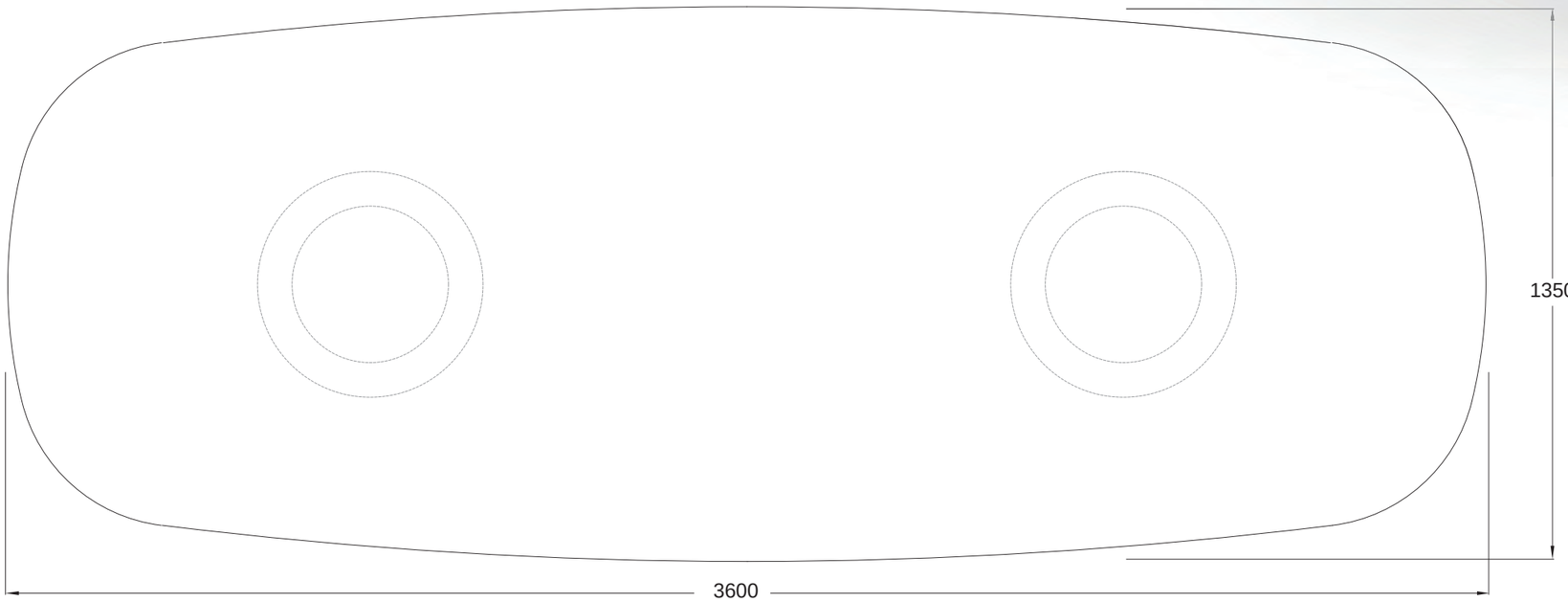

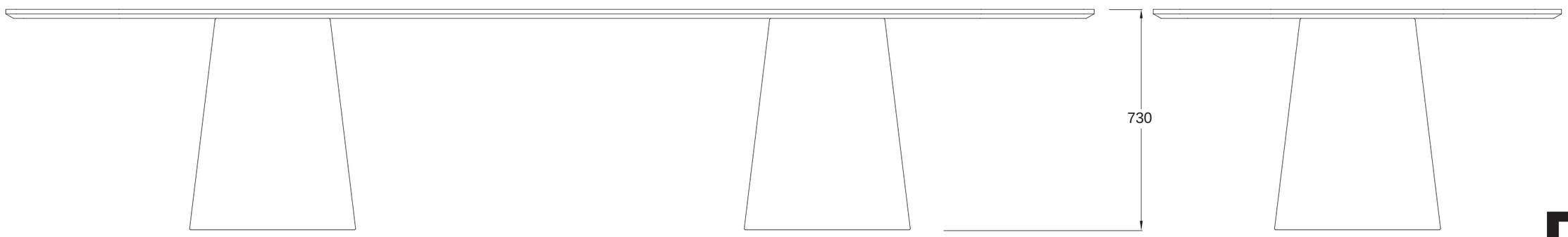

Didier™

LIQUEUR TABLE [RECTANGLE]

LQ_TB.270x135[RECTANGLE]



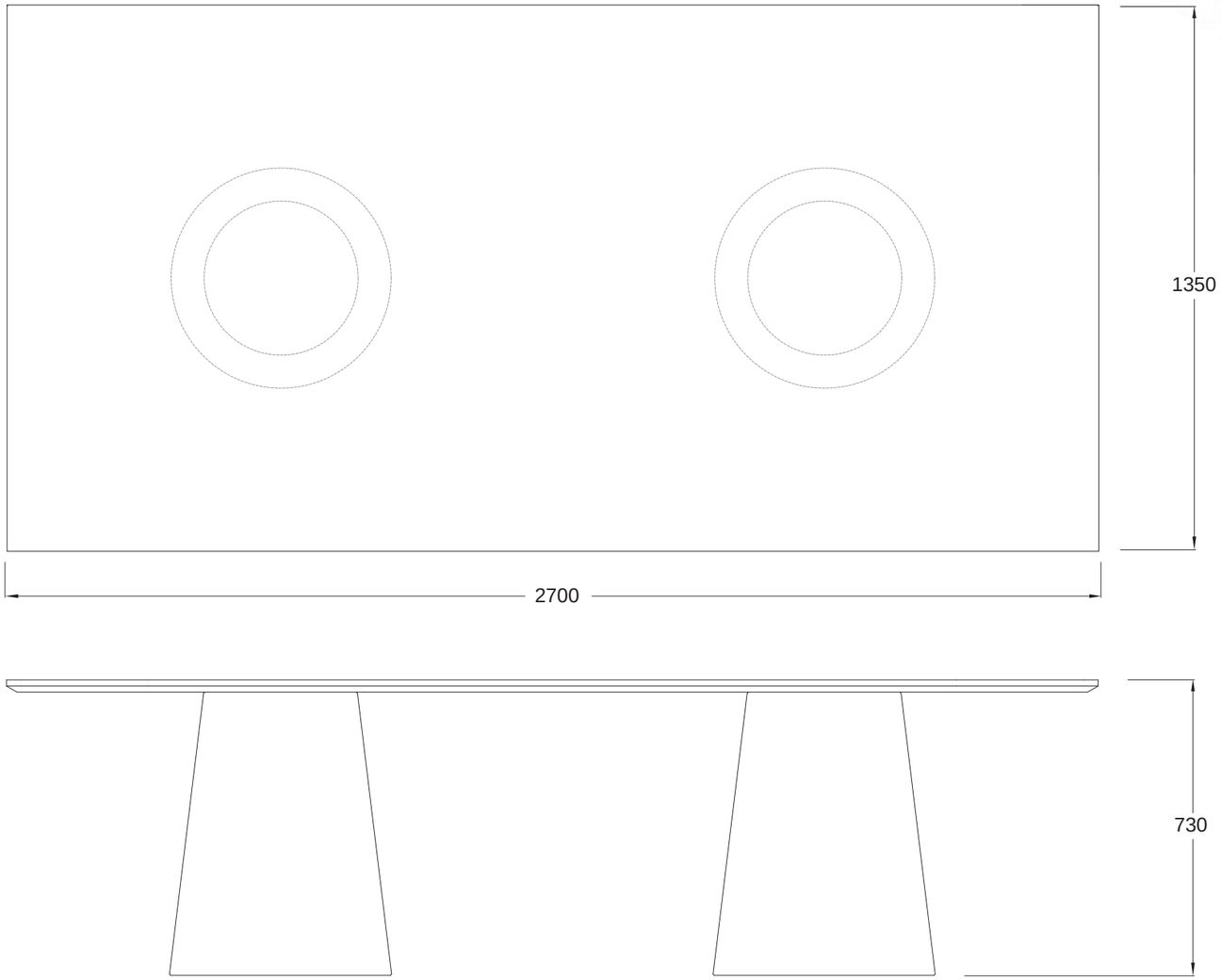

Didier™

LIQUEUR TABLE [RECTANGLE]

LQ_TB.300x135[RECTANGLE]



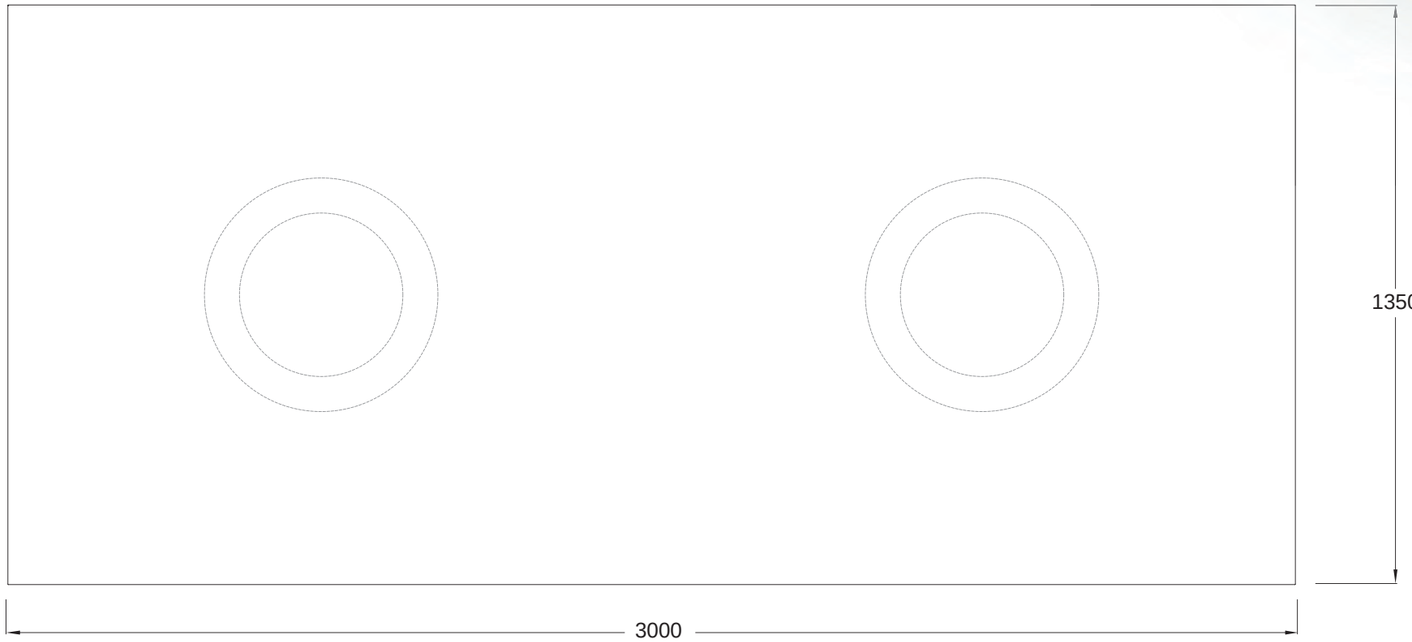

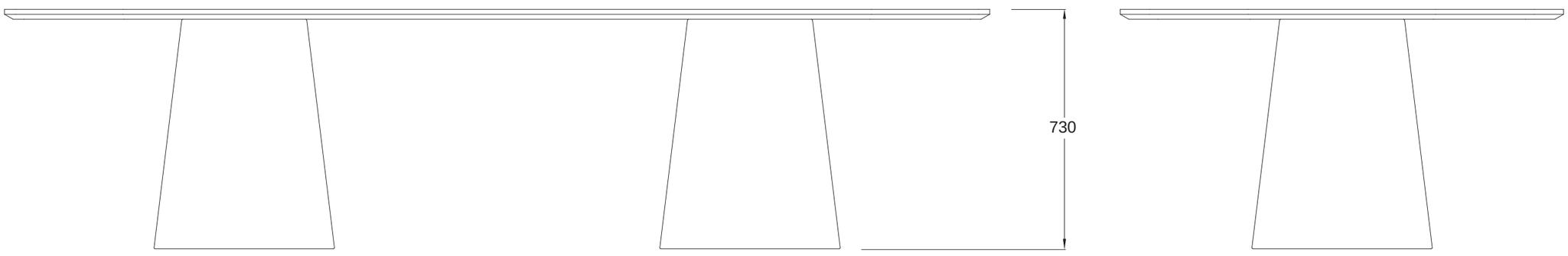

Didier™

LIQUEUR TABLE [RECTANGLE]

LQ_TB.330x135[RECTANGLE]



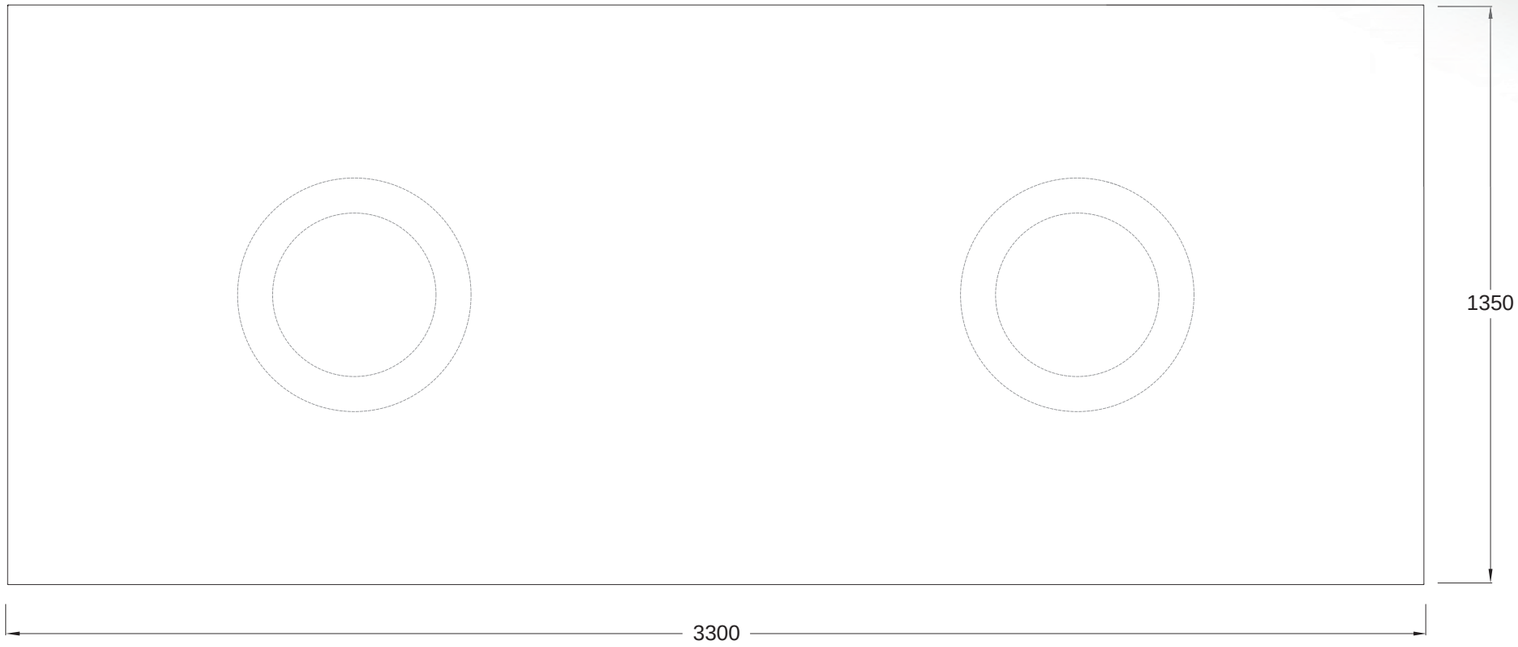

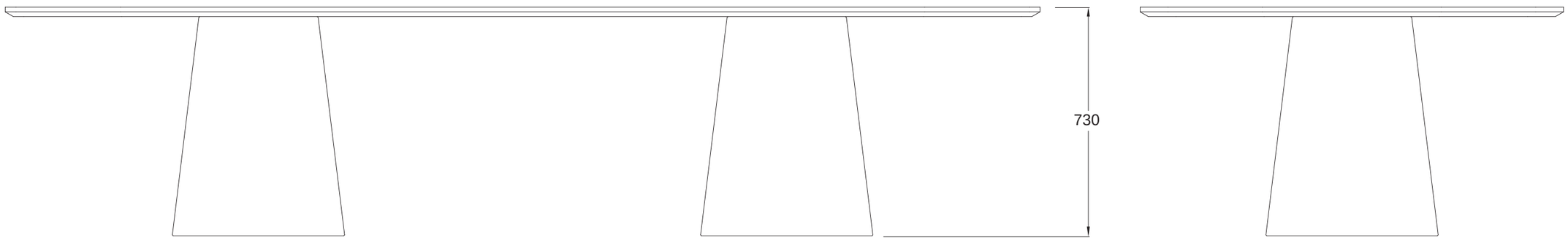

Didier™

LIQUEUR TABLE [RECTANGLE]

LQ_TB.360x135[RECTANGLE]



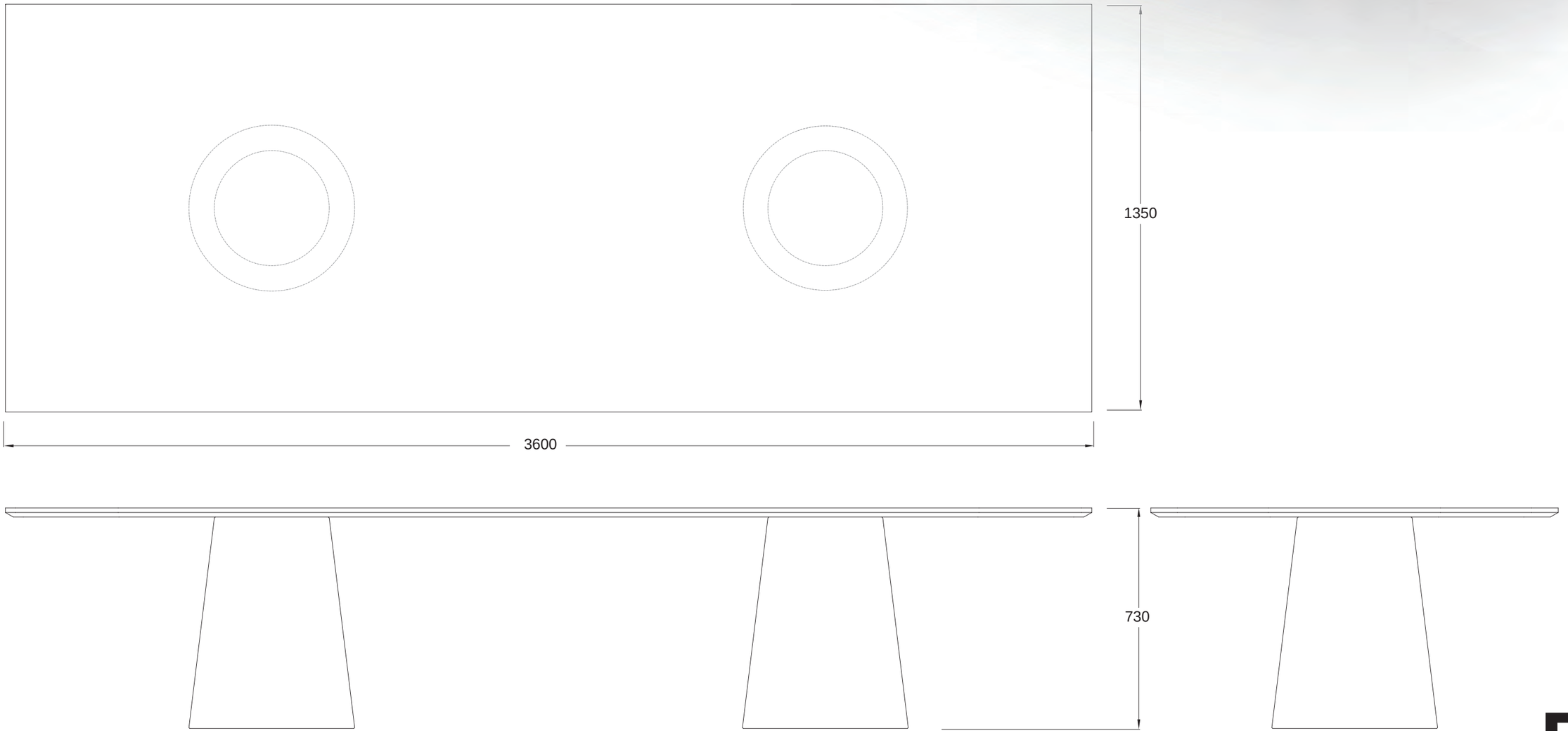

Didier™

LIQUEUR TABLE (EXT) - CONFIG A

LQ_EXT_55D+40 X4



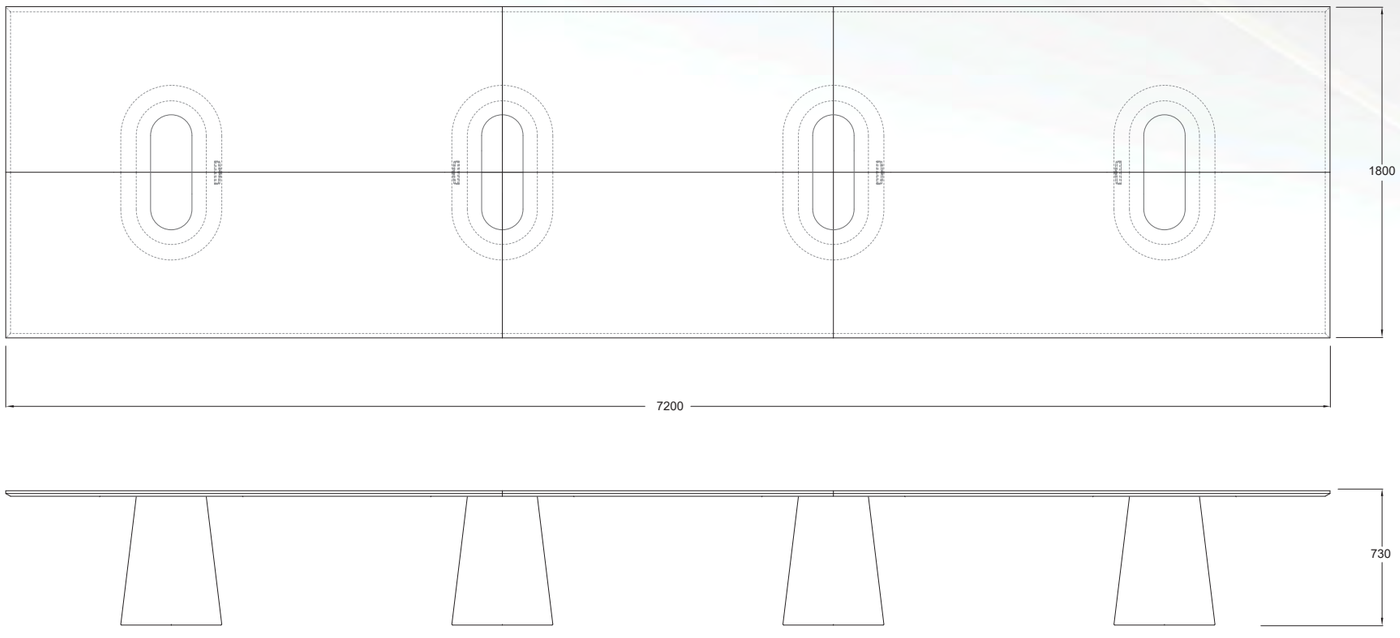

Didier™

LIQUEUR TABLE (EXT) - CONFIG A

LQ_EXT_55D+40 X4



Didier™

LIQUEUR TABLE (EXT) - CONFIG B

LQ_EXT_55D+20 X3



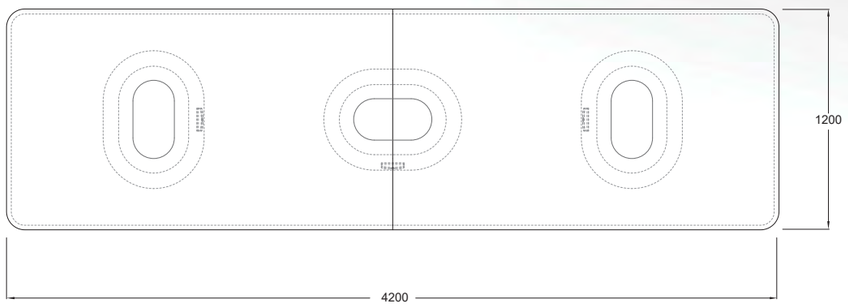

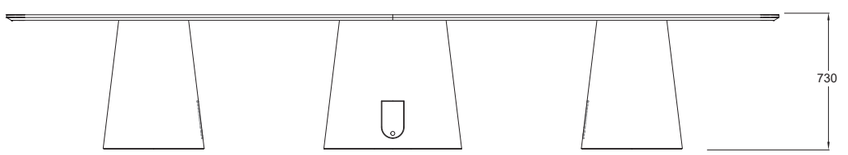

Didier™

LIQUEUR TABLE (EXT) - CONFIG B

LQ_EXT_55D+20 X3



Didier™

LIQUEUR TABLE (EXT) - CONFIG C

LQ_EXT_55D+20 X2



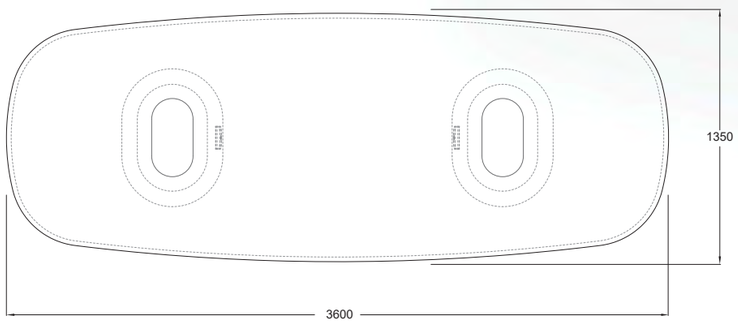



Didier™

LIQUEUR TABLE (EXT) - CONFIG C

LQ_EXT_55D+20 X2



Didier®

LIQUEUR TABLE (EXT) - CONFIG D

LQ_EXT.BAR_55D+40 X1



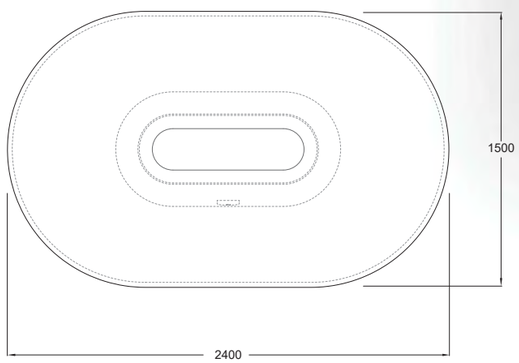

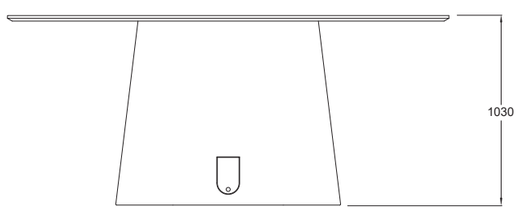

Didier®

LIQUEUR TABLE (EXT) - CONFIG D

LQ_EXT.BAR_55D+40 X1



Didier™