PUFFALO LOUNGING

COLLECTION

Celebrating the horizontal life, DIDIER's Puffalo modular range speaks of cool bohemian chic. Like the love child of Moncler and Jaguar's E-Type, the Puffalo just begs you to lounge. Flop down, chillout and feel yourself descending into slow motion.

"I liked the idea of having a slow and languorous feel to the range, using premium quality materials that creates the feeling of billowing cushions on the floor. Something for the free and easy generation, who just love to be close to the ground. It might bring back memories of lazy afternoons playing records, flicking through magazines and just doing whatever . . ."

PUFFALO exemplifies laid-back style with sensuous and elongated proportions. Defined by a modular range of twenty curvaceous forms that can be configured and reconfigured in a myriad of ways, PUFFALO is designed as evolving lounge terrain, shifting and reshaping to accommodate individual rhythms and personal style, adapting from the largest of living rooms to the smallest of statement pieces.

Its elegant design engenders collaboration and freedom of imagination to configure unique upholstery landscapes that become statements of artistic expression. Sexy in leather. Bohemian in velvet. Playful Pattern. Make it your own.

PUFFALO comprises modular lounging, ottoman, and extended chaise pieces, that can be assembled together with unique joining kits and layered with Puffalo loose cushions.

Hand-made to order in Melbourne and providing an exceptional level of craftsmanship, comfort and support.

MATERIALS

FSC plantation Australian timber.
No-sag steel spring suspension.
GECA rated polyurethane foam & memory foam.
Upholstered in specified fabrics or leathers.
Loose cushions 100% feather fill.

FINISHES

Bespoke custom upholstery in a refined choice of fabrics or leathers.

FEATURES

Ease of assembly into unlimited configuration shapes & sizes.
Handmade craftsmanship with premium foam layering for superior comfort.
Durable steel spring suspension for exceptional support.

WARRANTY

Five year manufacturing warranty covering defective craftsmanship that is subject to normal use. Please contact Didier for full terms and conditions.

PUFFALO Range: Lounging

PF-LG.87x115 — 870 W x 1150 D x 680 H (SH 410)

PF-LG.115x115 — 1150 W x 1150 D x 680 H (SH 410)

PF-LG.115x190 — 1150 W x 1900 D x 680 H (SH 410)

PF-LG_ARM[L].115x115 — 1150 W x 1150 D x 680 H (SH 410)

PF-LG_COR.115x115 — 1150 W x 1150 D x 680 H (SH 410)

PF-LG_ARM[R].115x115 — 1150 W x 1150 D x 680 H (SH 410)

CONTINUED →

PUFFALO Range: Lounging cont.

PF-LG_COR.R115 1150 W x 1150 D x 680 H (SH 410)

PF-LG_IN.R210 1610 W x 1150 D x 680 H (SH 410)

PF-LG_OUT.R210 1610 W x 1150 D x 680 H (SH 410)

PF-LG_CHS[L].190x115 1900 W x 1150 D x 680 H (SH 410)

PF-LG_CHS[R].190x115 1900 W x 1150 D x 680 H (SH 410)

PF-LG_CHS-COR[L].115x190 1150 W x 1900 D x 680 H (SH 410)

PF-LG_CHS-COR[R].115x190 1150 W x 1900 D x 680 H (SH 410)

PF-LG_ARMS.115x106 1150 W x 1060 D x 680 H (SH 410)

PUFFALO Range: Loose Cushions

PF-LG_CUSH.45x45

PF-LG_CUSH.62x62

PF-LG_CUSH.74x42

CONTINUED →

PUFFALO Range: Ottomans

PF-LG_OT.87x115 870 W x 1150 D x 410 H

PF-LG_OT.115x115 1150 W x 1150 D x 410 H

PF-LG_OT.87190x115 1900 W x 1150 D x 410 H

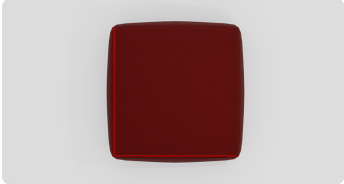

PF-LG_OT_COR.115x115 1150 W x 1150 D x 410 H

PF-LG_OT_3WAY.115x115 1150 W x 1150 D x 410 H

PF-LG_OT_4WAY.115x115 1150 W x 1150 D x 410 H

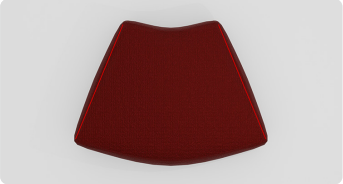

PF-LG_OT.R210 1610 W x 1150 D x 410 H

CARE INSTRUCTIONS:

- Dust and vacuum upholstery regularly to remove dry dirt and dust.
- Reshape and rotate cushions to maintain shape.
- Fabric and leather companies have their own 'care and maintenance' instructions for each product.
- Didier recommends always reading the label of any cleaning products and not using cleaning agents containing abrasives or solvents.

ENVIRONMENTAL STATEMENT:

At Didier, we believe good design should enhance life without costing the earth. Our work is rooted in responsibility - sourcing sustainable materials, minimising waste in production and collaborating closely with skilled makers, prioritising ethical supply chains. We design for longevity, creating enduring pieces that stand the test of time. To us, sustainability is not a trend, but a guiding principle, that is woven into every stage of our artistic process and every original idea we bring to life.

Didier

PUFFALO MODULAR LOUNGING

PF-LG.87X115

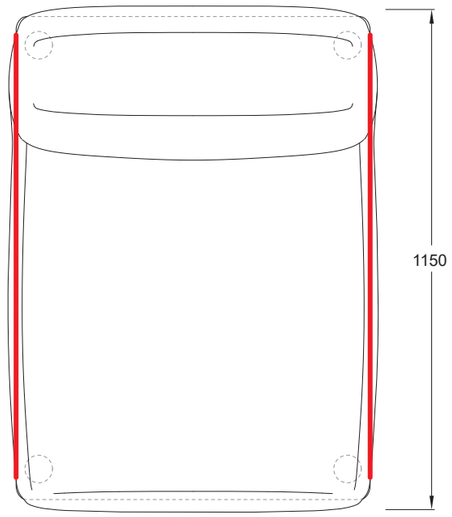

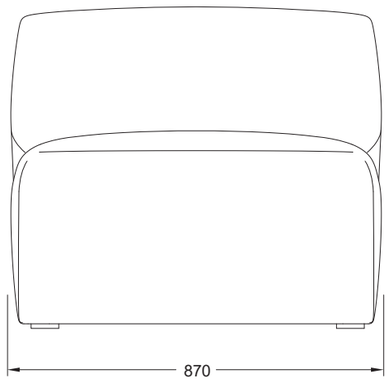

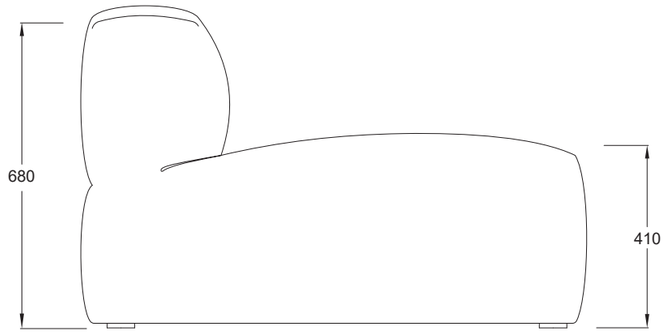

Didier™

PUFFALO MODULAR LOUNGING

PF-LG.115X115

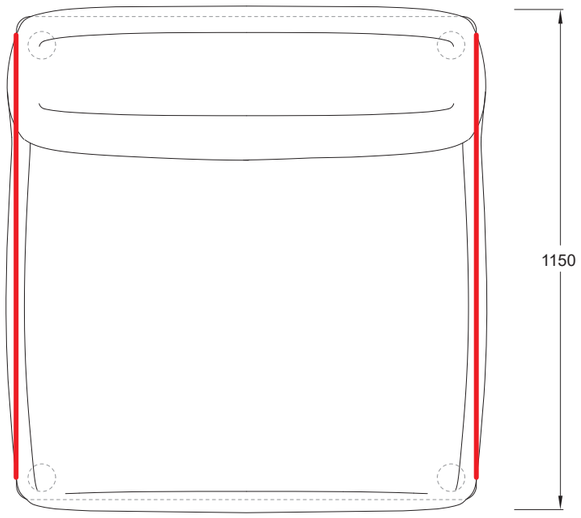

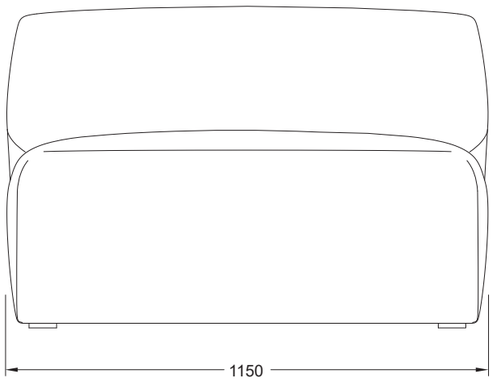

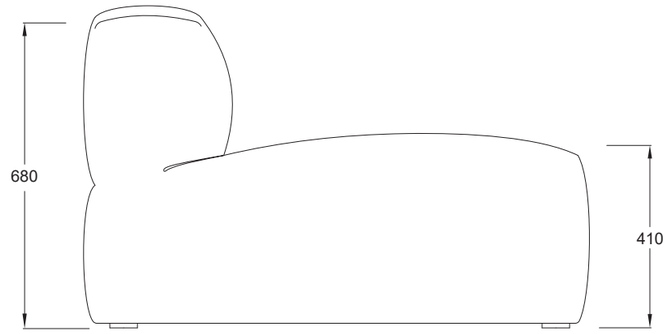

Didier™

PUFFALO MODULAR LOUNGING

PF-LG.115X190

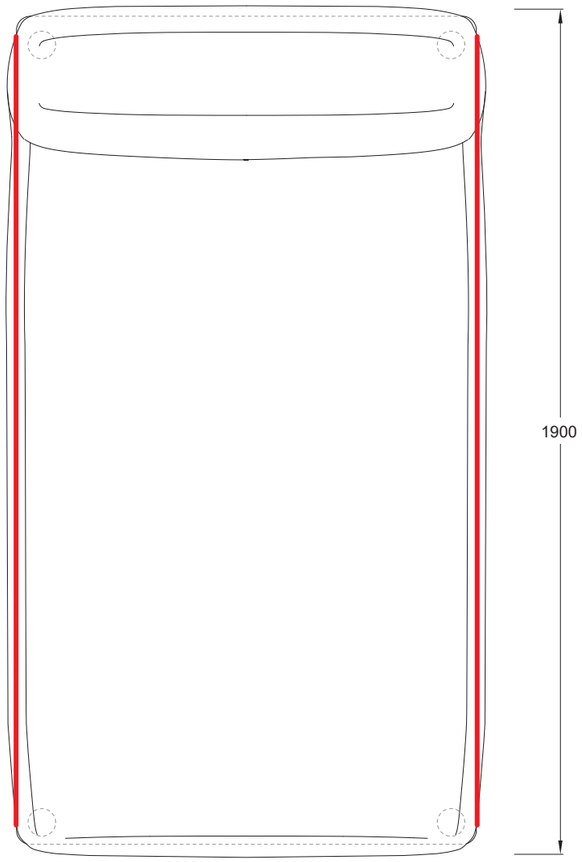

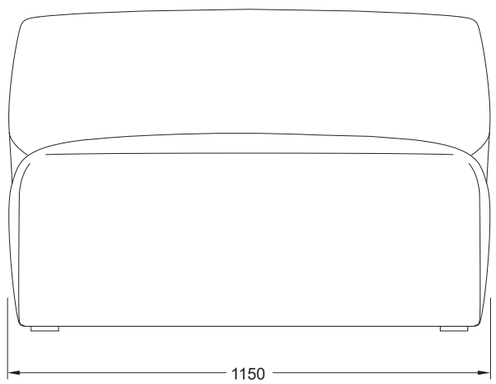

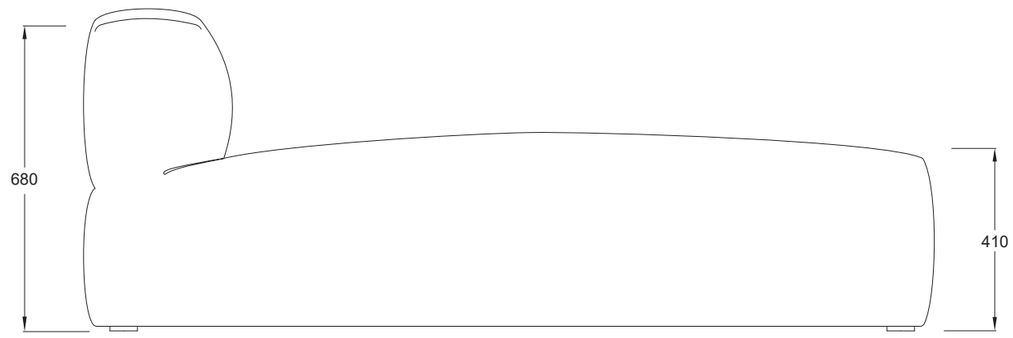

Didier™

PUFFALO MODULAR LOUNGING

PF-LG_COR.115X115

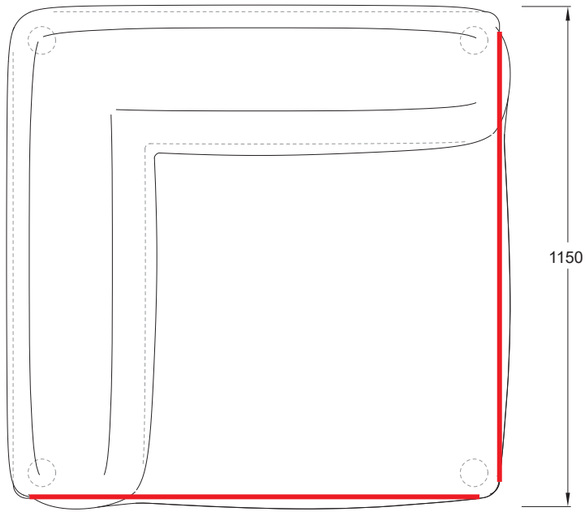

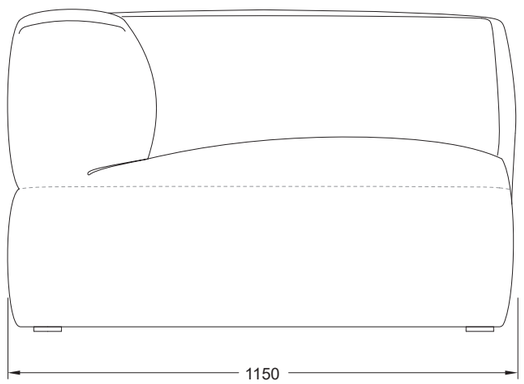

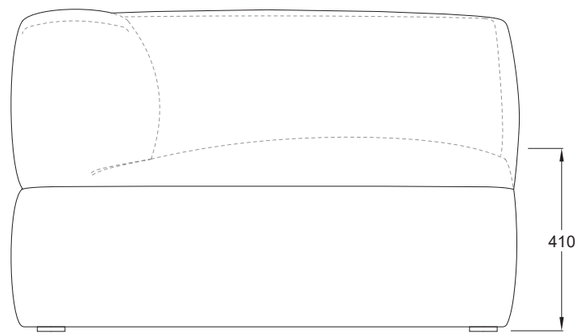

Didier™

PUFFALO MODULAR LOUNGING

PF-LG_ARM(L).115X115

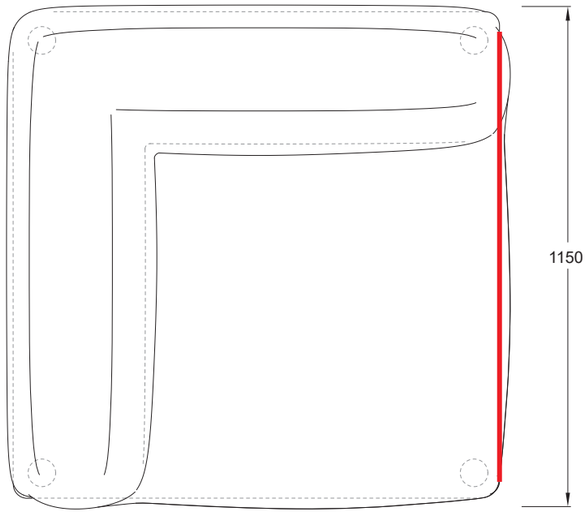

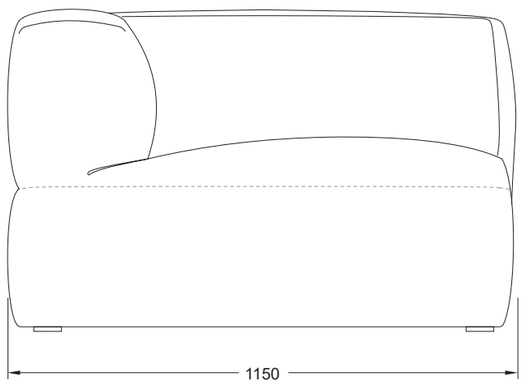

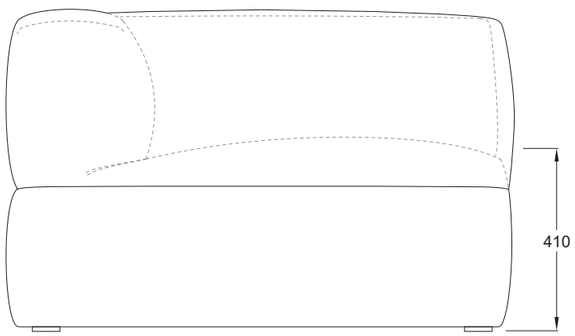

Didier™

PUFFALO MODULAR LOUNGING

PF-LG_ARM(R).115X115

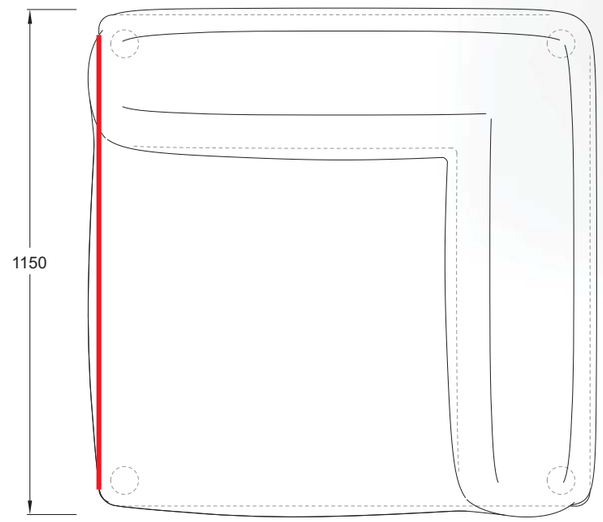

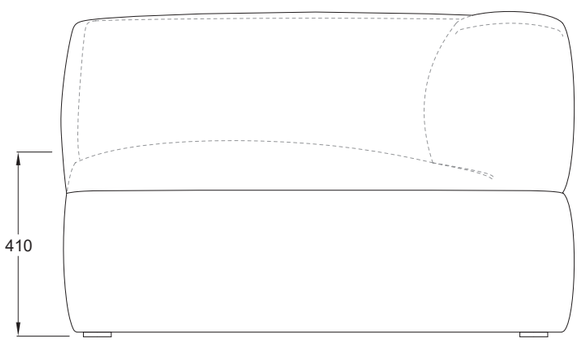

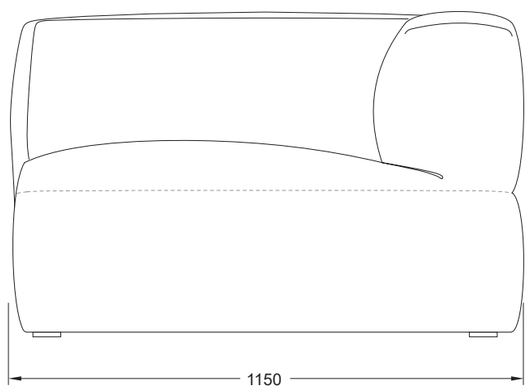

Didier™

PUFFALO MODULAR LOUNGING

PF-LG_COR.R115

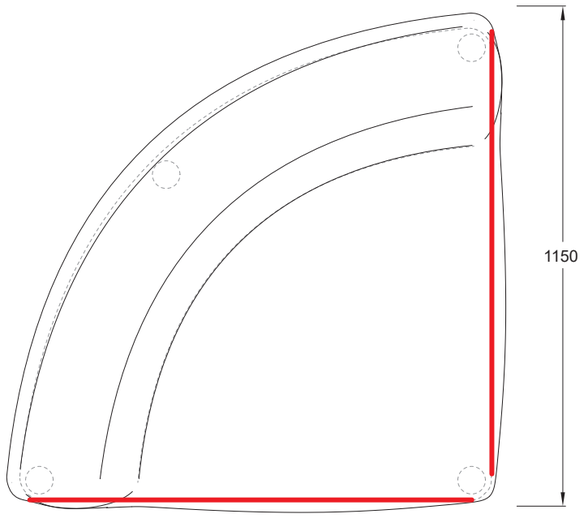

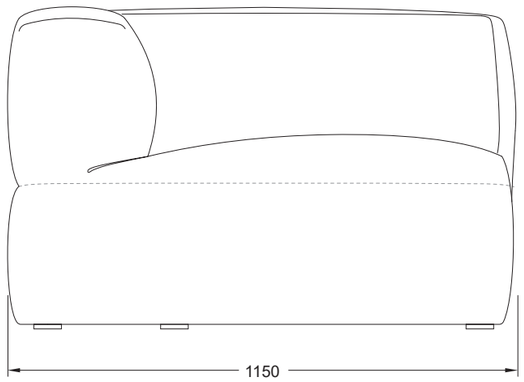

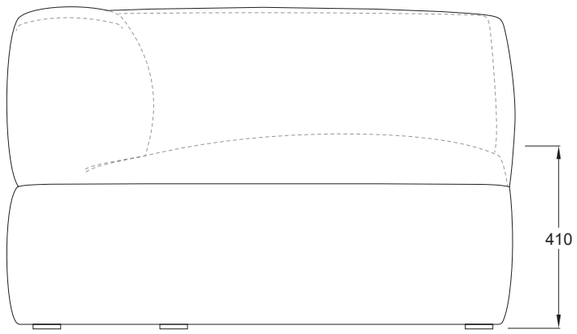

Didier™

PUFFALO MODULAR LOUNGING

PF-LG_IN.R210

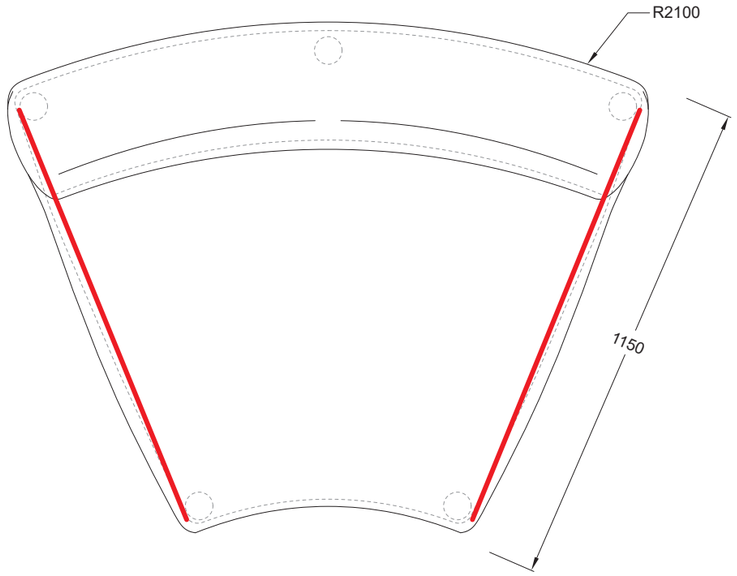

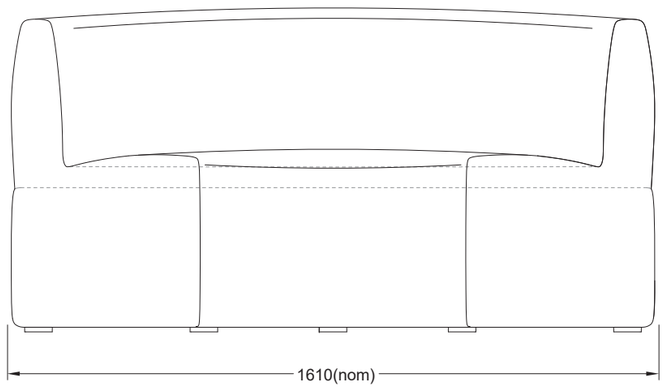

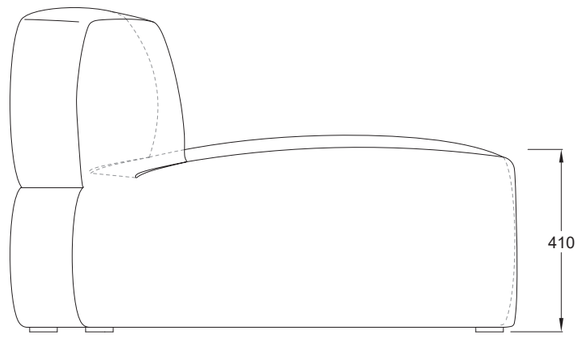

Didier™

PUFFALO MODULAR LOUNGING

PF-LG_OUT.R210

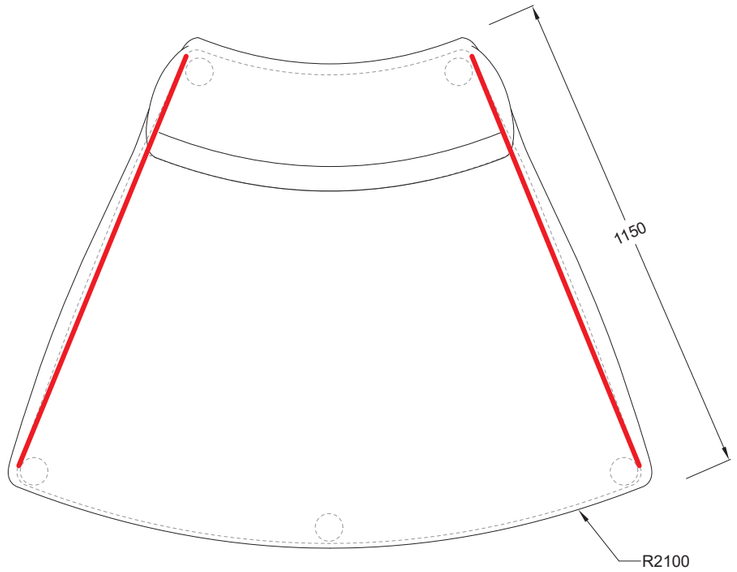

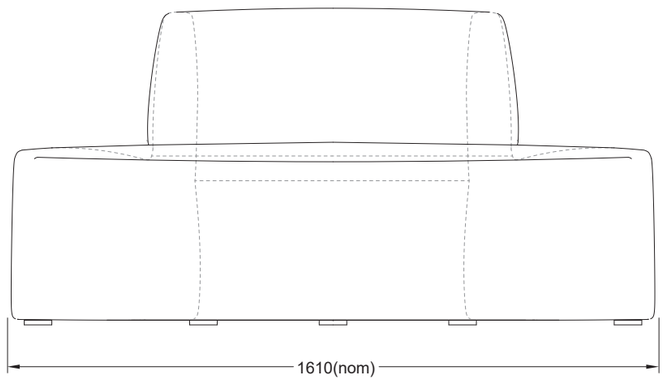

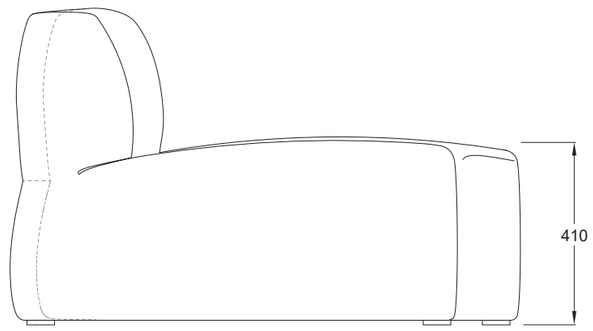

Didier™

PUFFALO MODULAR LOUNGING

PF-LG_CHS[L].190x115

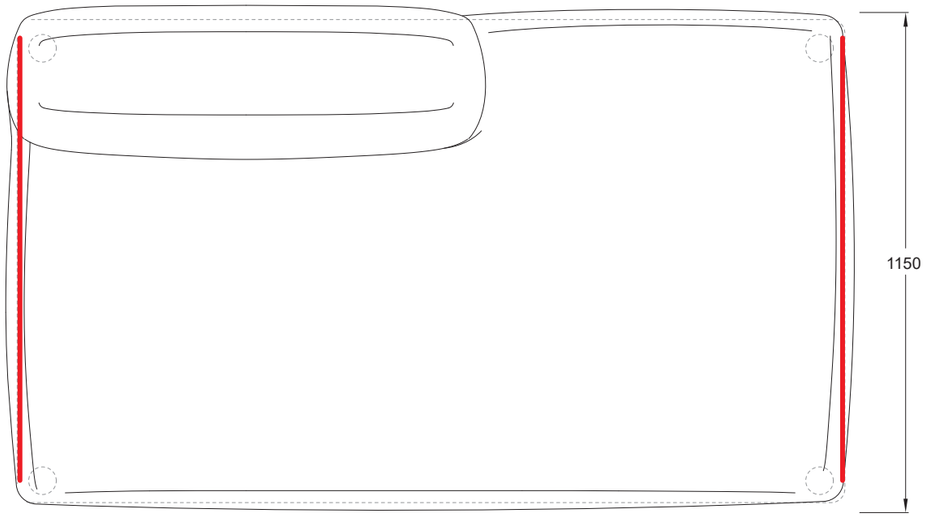

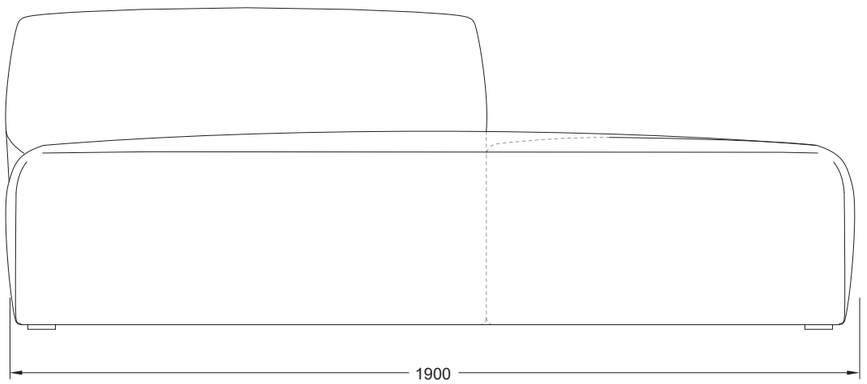

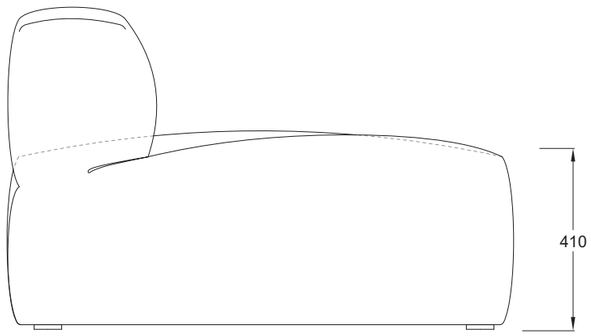

Didier™

PUFFALO MODULAR LOUNGING

PF-LG_CHS[R].190x115

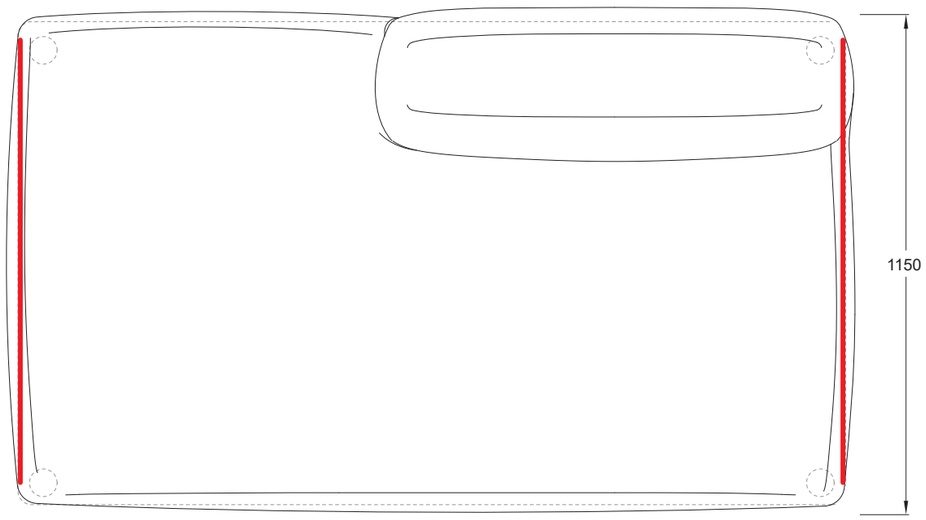

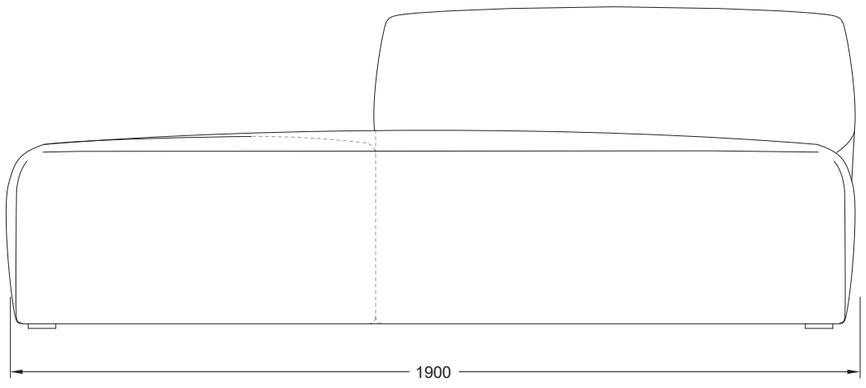

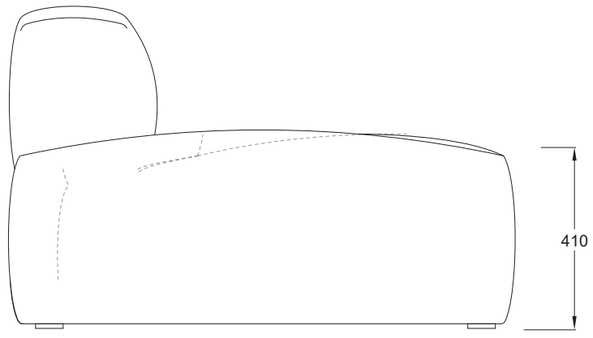

Didier™

PUFFALO MODULAR LOUNGING

PF-LG_CHS-COR[L].115x190

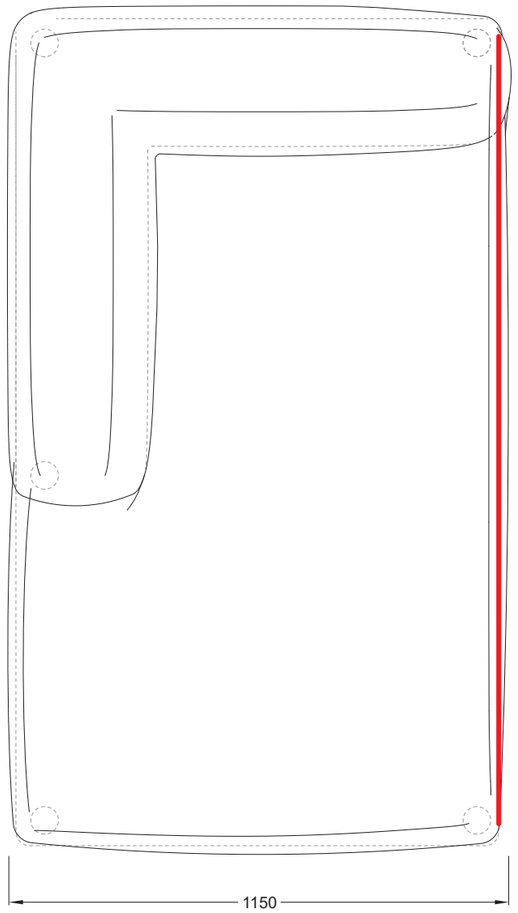

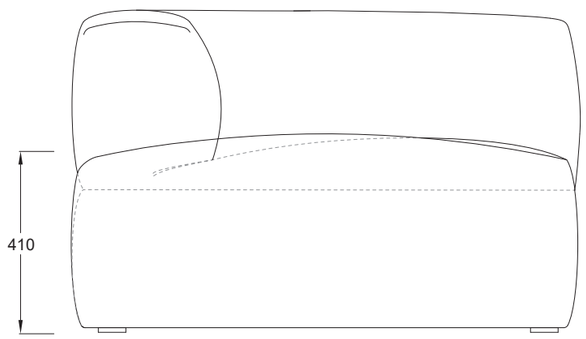

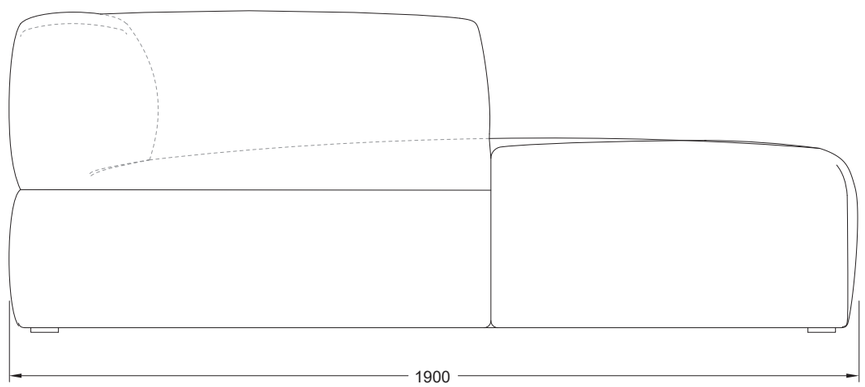

Didier™

PUFFALO MODULAR LOUNGING

PF-LG_CHS-COR[R].115x190

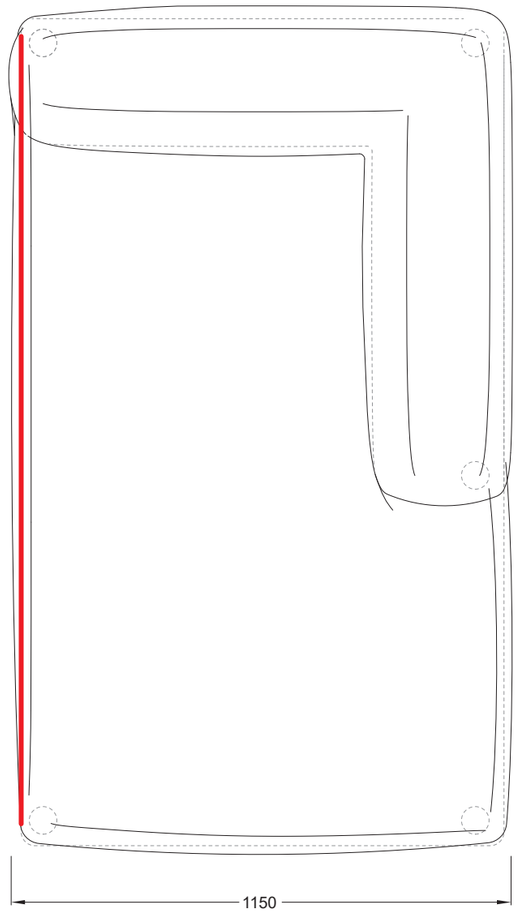

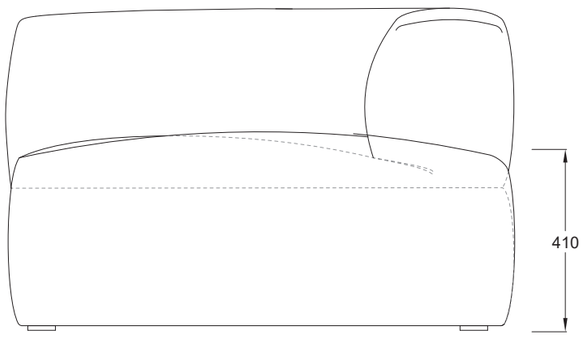

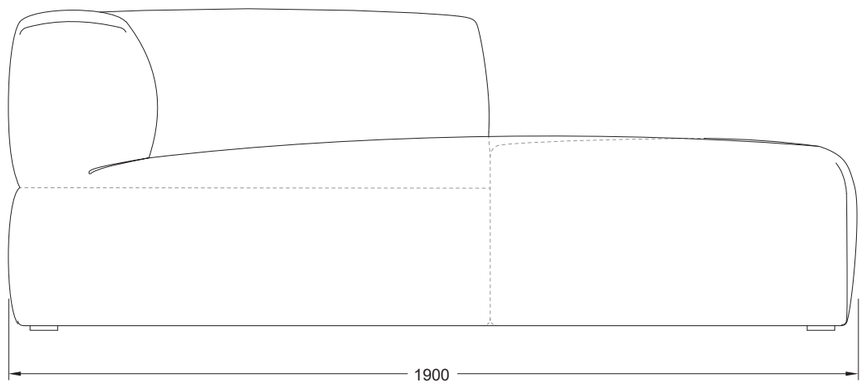

Didier™

PUFFALO MODULAR LOUNGING

PF-LG_ARMS.115x106

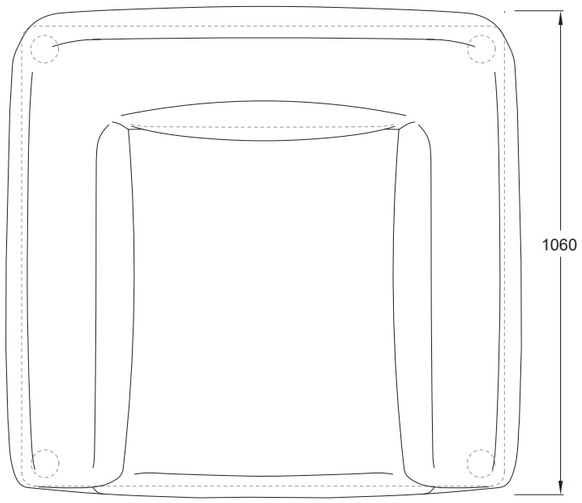

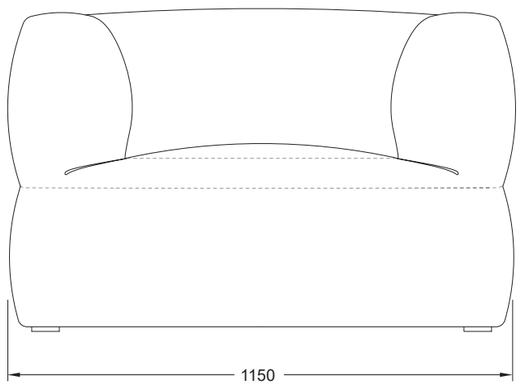

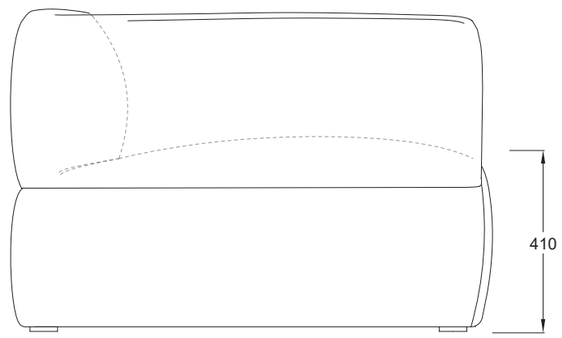

Didier™

PUFFALO MODULAR LOUNGING

PF-LG_CUSH.62x62
PF-LG_CUSH.45x45
PF-LG_CUSH.72x42

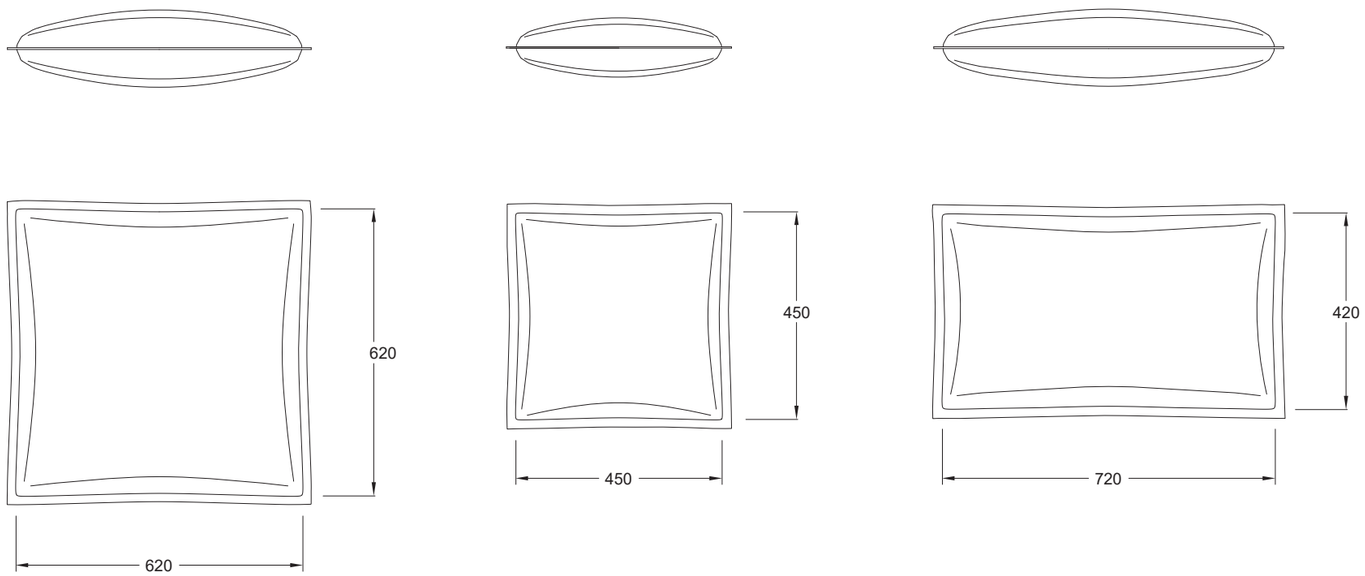

Didier™

PUFFALO LOUNGE OTTOMANS

PF-LG_OT.87X115

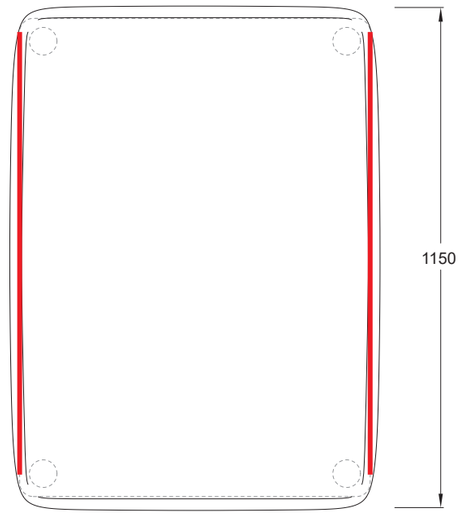

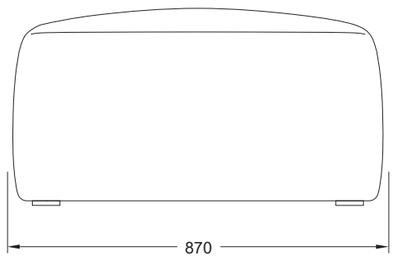

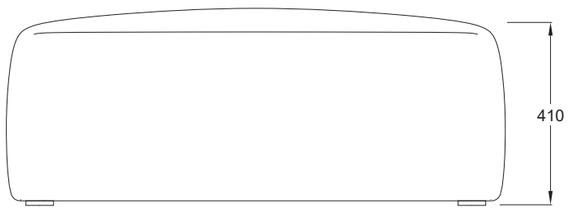

Didier™

PUFFALO LOUNGE OTTOMANS

PF-LG_OT.115X115

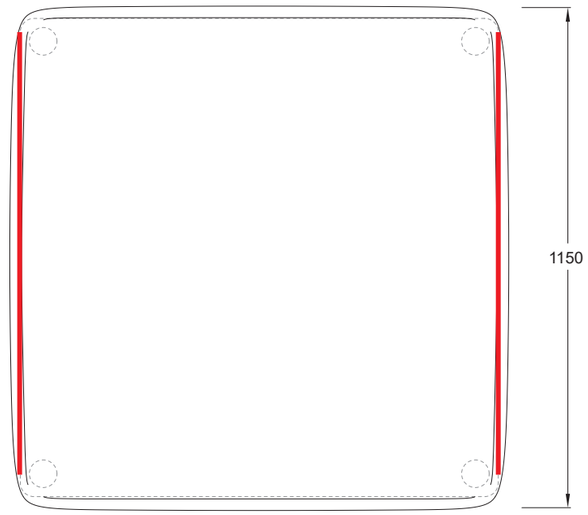

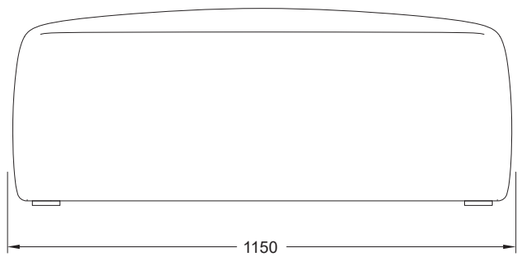

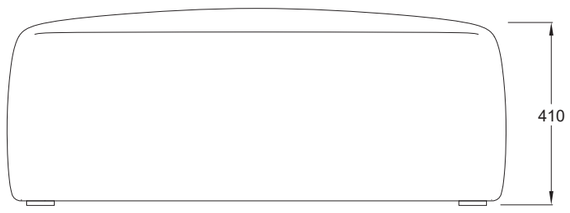

Didier™

PUFFALO LOUNGE OTTOMANS

PF-LG_OT_COR.115X115

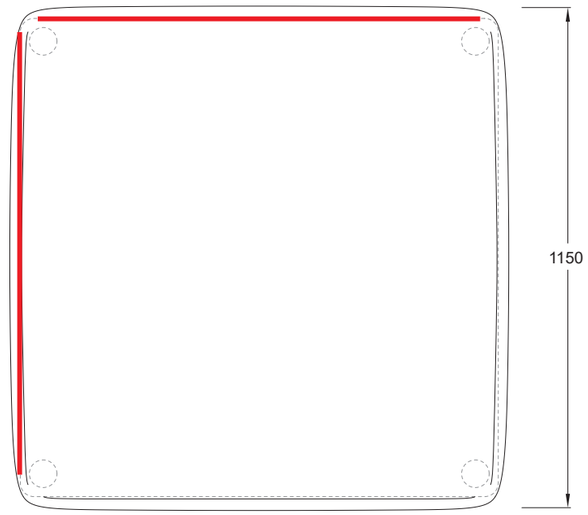

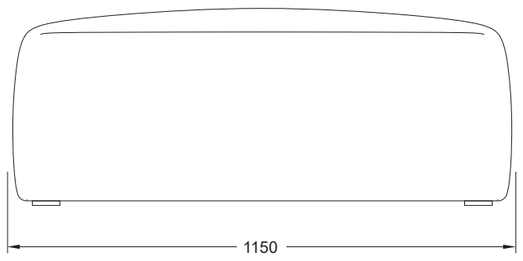

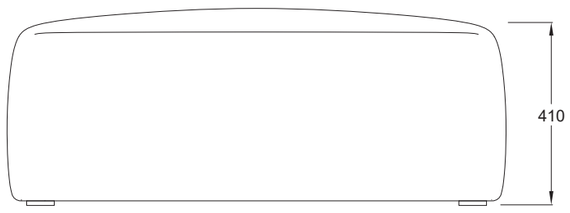

Didier™

PUFFALO LOUNGE OTTOMANS

PF-LG_OT_3WAY.115X115

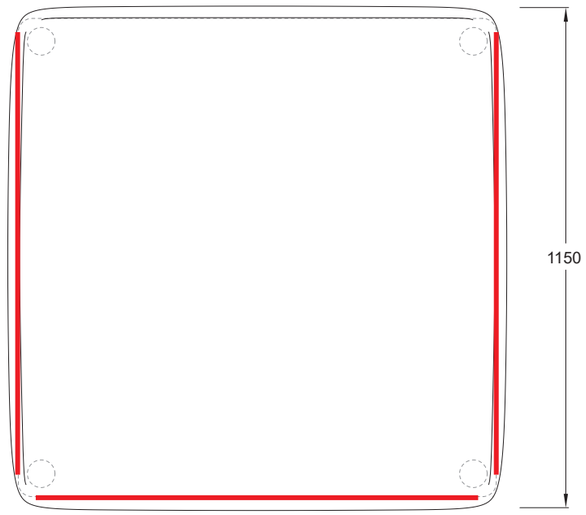

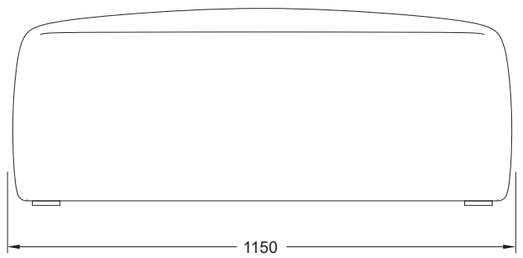

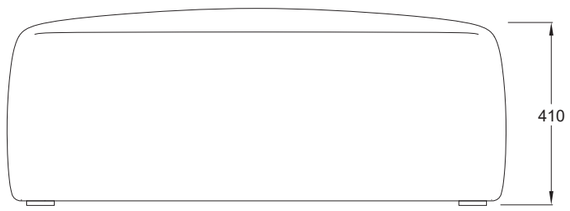

Didier™

PUFFALO LOUNGE OTTOMANS

PF-LG_OT_4WAY.115X115

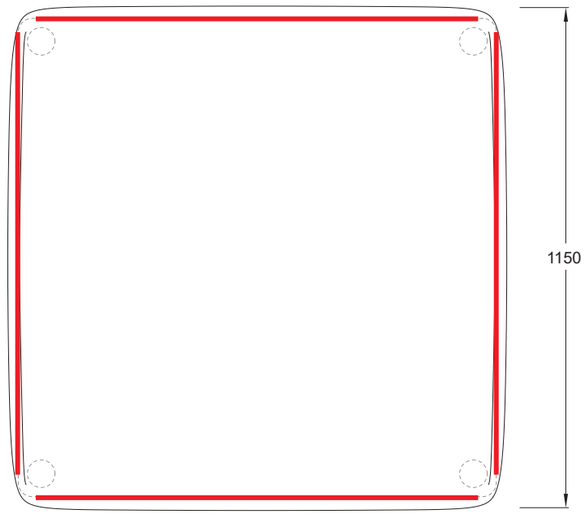

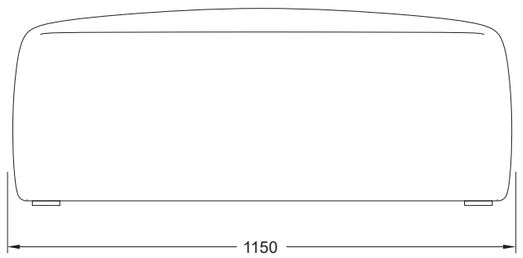

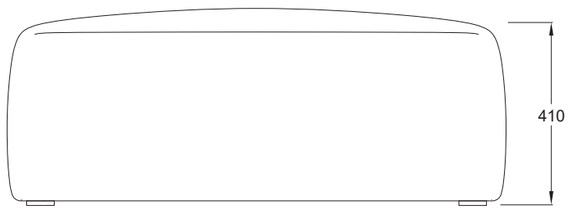

Didier™

PUFFALO LOUNGE OTTOMANS

PF-LG_OT.190X115

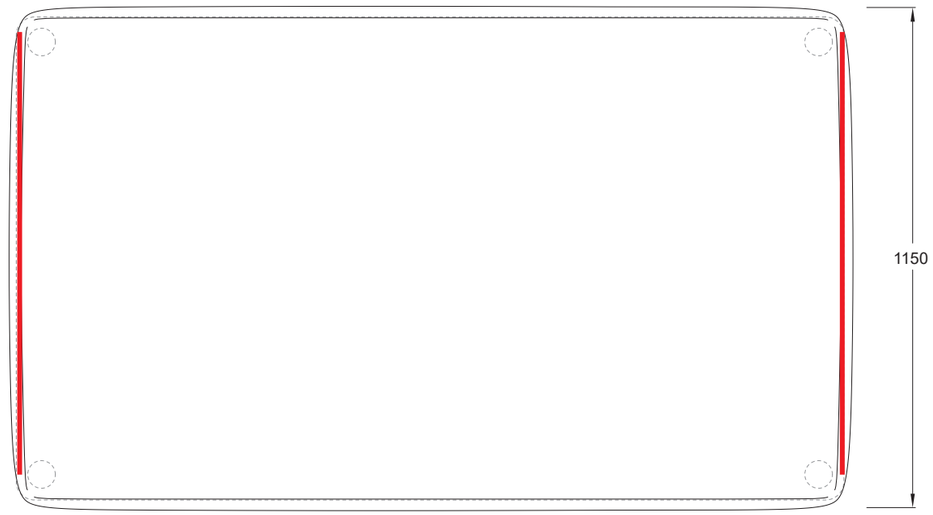

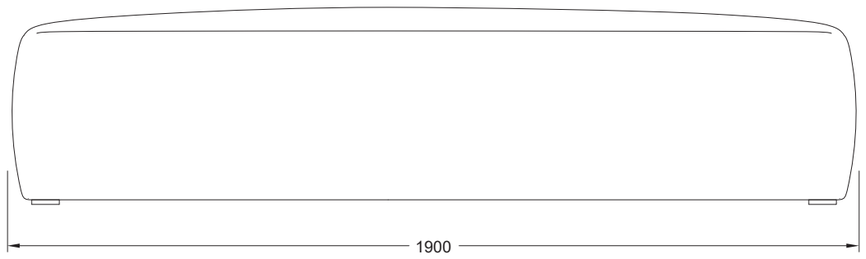

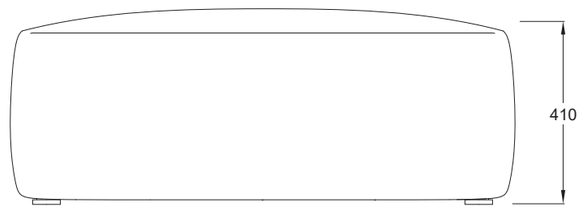

Didier™

PUFFALO LOUNGE OTTOMANS

PF-LG_OT.R210

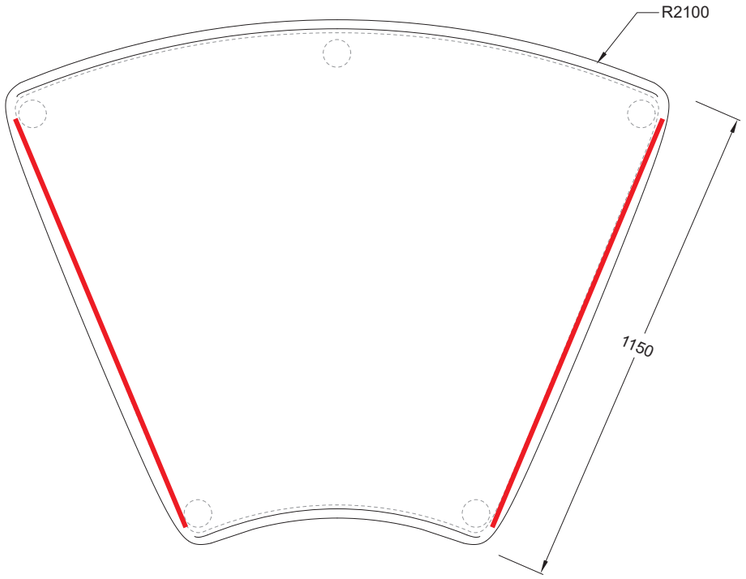

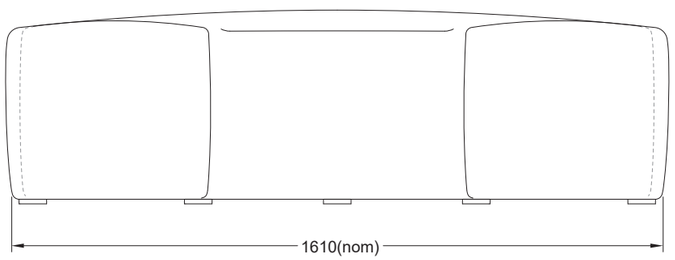

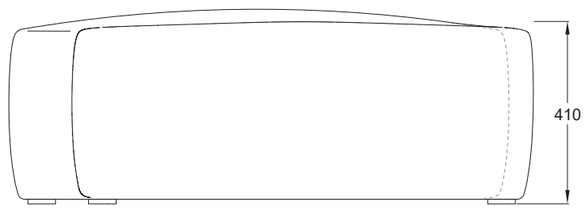

Didier™

PUFFALO - ASSEMBLY

PF-LG_JK

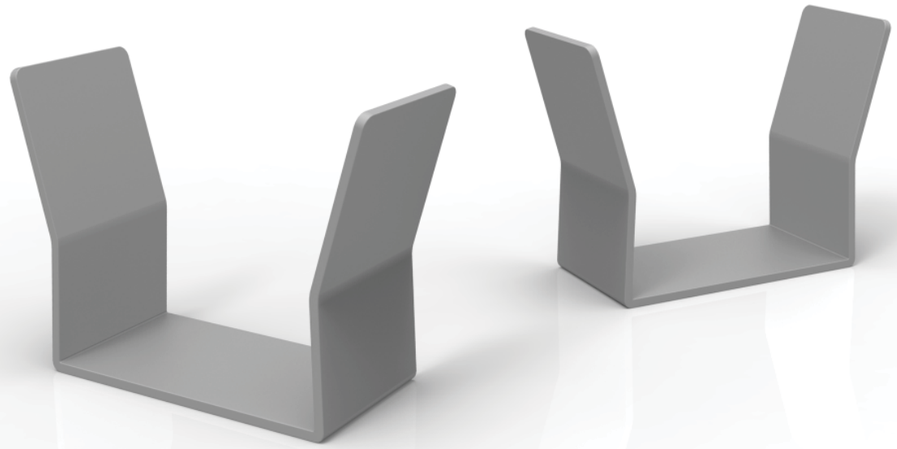

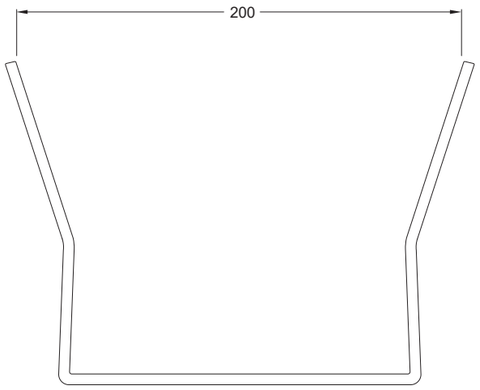

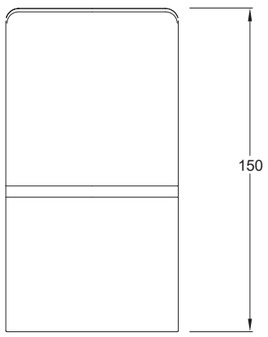

Didier™